Amerimax Building Products Patio Cover, Carport and Commercial Structure Engineerin

PAGES	DRAWING	SECTION DESCRIPTION
2 PAGES	GN01-2006 GN02-2006	GENERAL NOTES
4 PAGES	SC01-2006 SC02-2006 SC03-2006 SC04-2006	SOLID PANEL STRUCTURAL CONFIGURATIONS SOLID PANEL DETAIL CALLOUTS ALUMAWOOD STRUCTURAL CONFIGURATIONS ALUMAWOOD DETAIL CALLOUTS
1 PAGE	1	**LATTICE** 1.0 RAFTER SPANS FOR COMMERCIAL AND PATIO STRUCTURES
4 PAGES	2 - 5	**LATTICE** 2.0 POST SPACINGS FOR LATTICE PATIO AND COMMERCIAL STRUCTURES IN 90 MPH WIND AREAS
4 PAGES	6 - 9	**LATTICE** 3.0 POST SPACINGS FOR LATTICE PATIO AND COMMERCIAL STRUCTURES IN HIGH WIND AREAS
3 PAGES	LT01-2006 LT02-2006 LT03-2006	COMPONENT PARTS AND CONNECTION DETAILS FOR LATTICE STRUCTURES
1 PAGE	1	**SOLID COVER** 4.0 PANEL SPANS FOR COMMERCIAL AND PATIO STRUCTURES
10 PAGES	2-11	**SOLID COVER** 5.0 POST SPACINGS FOR LATTICE PATIO AND COMMERCIAL STRUCTURES IN 90 MPH WIND AREAS
10 PAGES	12-21	**SOLID COVER** 6.0 POST SPACINGS FOR LATTICE PATIO AND COMMERCIAL STRUCTURES IN HIGH WIND AREAS
4 PAGES	NP01-2006 NP02-2006 NP03-2006 NP04-2006	COMPONENT PARTS AND CONNECTION DETAILS FOR NEWPORTS
9 PAGES	CD01-2006 CD02-2006 CD03-2006 CD04-2006 CD05-2006 CD06-2006 CD07-2006 CD08-2006 CD09-2006	COMPONENT PARTS AND CONNECTION DETAILS
5 PAGE	M1-2006 M2-2006 M3-2006 M4-2006 M5-2006	MISCELLANEOUS DETAILS MISCELLANEOUS DETAILS 7.0 POST AND FASTENER REQUIREMENTS FOR ALL STRUCTURES 7.0 FOOTING AND SLAB ATTACHMENT TABLES 7.0 REQUIREMENTS FOR SURFACE MOUNTED POSTS ON CONCRETE SLABS OR FOOTINGS

REGISTERED PROFESSIONAL ENGINEER 72580PE OREGON JULY 15, 2003 CARL M. PUTNAM

EXPIRATION DATE: 12/31/10

CARL M. PUTNAM STATE OF WASHINGTON 39649 REGISTERED PROFESSIONAL ENGINEER

EXPIRES 2/25/10

MONTANA CARL PUTNAM No. 17994 PE LICENSED PROFESSIONAL ENGINEER

PROFESSIONAL ENGINEER-STATE OF NEVADA CARL PUTNAM Exp. 12/31/2009 CIVIL No. 16237

COLORADO LICENSED CARL PUTNAM 38353 PROFESSIONAL ENGINEER

Professional Engineer (Civil) CARL PUTNAM 11931 Date WYOMING

MAY 1 2 2009

CERTIFICATE NO. 38702 CARL PUTNAM Date Signed ARIZONA U.S.A. Expires 9/30/2009

PROFESSIONAL ENGINEER No. 5860906-2202 CARL M. PUTNAM STATE OF UTAH

CARL PUTNAM NEW MEXICO 17030 PROFESSIONAL ENGINEER

PROFESSIONAL ENGINEER CARL PUTNAM C 68139 EXP. 6/30/2009 CIVIL STATE OF CALIFORNIA

REGISTERED PROFESSIONAL ENGINEER CARL PUTNAM C 68139 EXP. 6/30/2009 CIVIL STATE OF CALIFORNIA

PROFESSIONAL ENGINEER REGISTERED 11214 STATE OF IDAHO CARL PUTNAM

4/27/2009

April 27, 2009

GENERAL NOTES:

1. DESIGNED IN ACCORDANCE WITH THE 2006 INTERNATIONAL BUILDING CODE. THIS REVIEW INCLUDES THE 2007 CALIFORNIA BUILDING CODE PROVISIONS THAT ARE LOCALLY ENFORCEABLE AND UNDER THE JURISDICTION OF CITY AND COUNTY BUILDING OFFICIALS. PROVISIONS RELATED SPECIFICALLY TO HOSPITIALS AND PUBLIC SCHOOLS IN CALIFORNIA ARE NOT PART OF THIS REVIEW.

2. ALUMINUM DESIGN IN ACCORDANCE WITH THE 2000 EDITION OF ALUMINUM ASSOCIATION'S SPECIFICATIONS AND CHAPTER 20 OF THE INTERNATIONAL BUILDING CODE.

3. DESIGN LOADINGS:

GROUND SNOW LOAD	DESIGN LOAD	
10 PSF	10 PSF	LIVE OR GROUND SNOW
20 PSF	20 PSF	LIVE OR GROUND SNOW
25 PSF	21 PSF	
30 PSF	25.2 PSF	
40 PSF	33.6 PSF	
60 PSF	50.4 PSF	

FOR 0.25/12 > SLOPE < 1/12

WIND SPEEDS IN THE 2006 IBC ARE "3 SECOND GUST WIND SPEED." ALL STRUCTURES DESCRIBED IN THIS REPORT ARE DESIGNED USING PRESSURES CALCULATED FORM "3 SECOND GUST WIND SPEEDS".

NOTE: EXPOSURE B: URBAN AND SUBURBAN AREAS, WOODED AREAS, OR OTHER TERRAIN WITH NUMEROUS CLOSELY SPACED OBSTRUCTIONS HAVING THE SIZE OF SINGLE-FAMILY DWELLINGS OR LARGER. EXPOSURE B SHALL BE ASSUMED UNLESS THE SITE MEET THE DEFINITION OF ANOTHER TYPE EXPOSURE.

EXPOSURE C: OPEN TERRAIN WITH SCATTERED OBSTRUCTIONS, INCLUDING SURFACE UNDULATIONS OR OTHER IRREGULARITIES, HAVING HEIGHTS GENERALLY LESS THAN 30 FEET (9144 MM) EXTENDING MORE THAN 1,500 FEET (457.2 M) FROM THE BUILDING SITE IN ANY QUADRANT THIS EXPOSURE SHALL ALSO APPLY TO ANY BUILDING LOCATED WITHIN EXPOSURE B TYPE TERRAIN WHERE THE BUILDING IS DIRECTLY ADJACENT TO OPEN AREAS OF EXPOSURE C TYPE TERRAIN IN ANY QUADRANT FOR A DISTANCE OF MORE THAN 600 FEET (182.9 M). THIS CATEGORY INCLUDES FLAT OPEN COUNTRY, GRASSLANDS AND SHORELINES IN HURRICANE-PRONE REGIONS.

SEISMIC LOADING
MAXIMUM Ss = 150% SHOWN IN 2006 IBC FIGURE 1613.5(1)
MAXIMUM Ss = 55% FOR 40 PSF AND 60 PSF GROUND SNOW LOADS. SEE GENERAL NOTE #20
S1 NOT APPLICABLE TO THESE STRUCTURES
SITE CLASS = D
BASIC SEISMIC FORCE RESISTNG SYSTEM
POSTS SURFACE MOUNTED = GENERIC SYSTEM >> R= 1.25
ANALYSIS PROCEDURE = EQUIVALENT LATERAL FORCE PROCEDURE

4. THIS ENTIRE ENGINEERING PACKAGE IS NOT REQUIRED FOR MOST BUILDING PERMITS. SUBMISSION FOR A BUILDING PERMIT MUST INCLUDE:
a. GENERAL NOTES (2 PAGES)
b. STRUCTURAL CONFIGURATIONS (1 OR 2 PAGES)
c. RAFTER SPAN TABLES (FOR LATTICE STRUCTURES), PANEL SPAN TABLES FOR SOLID COVER STRUCTURES) OR BOTH (FOR COMBINATION STRUCTURES)
d. HEADER POST SPACING, FOOTING SIZE AND POST TABLE FOR LIVE/SNOW AND WIND LOAD
e. ALL APPROPRIATE DETAILS
f. OTHER DOCUMENTATION REQUIRED BY LOCAL BUILDING AUTHORITY.

REGISTERED PROFESSIONAL ENGINEER
CARL PUTNAM
C 68139
EXP. 6/30/2009
CIVIL
STATE OF CALIFORNIA

4/27/2009
ENGINEERS STAMP

Amerimax BUILDING PRODUCTS, INC.
5208 TENNYSON PARKWAY
SUITE 100
PLANO, TEXAS 75024

DRAWN BY: CMP		
SCALE: NONE	DRAWING OR PART NAME: GENERAL NOTES	
DATE:	DRAWING OR PART NUMBER: GN01-2006	SHEET 1 OF 2

GENERAL NOTES:
(CONTINUED FROM SHEET NO. 1)

5. CONCRETE MIX: Fc=2500, 3000 OR 3500 PSI FOR 28 DAYS IN NEGLIGIBLE, MODERATE, AND SEVERE CONDITIONS AS SHOWN IN FIGURE 1904.2.2 OF THE 2006 IBC. PATIO STRUCTURES MAY BE ATTACHED TO CONCRETE SLAB WITHOUT FOOTINGS WHEN THE POST LOAD IS 750# OR LESS. CONCRETE SHALL BE A MINIMUM OF 3.5 INCHES THICK AND NO CRACKS WITHIN 2'-6" OF POSTS. POSTS SHALL BE SET BACK A MINIMUM OF 4 INCHES FROM EDGE OR EXPANSION JOINT OF A SLAB. POSTS WILL COMPLY WITH THE CORNER DISTANCES OF TABLES SLAB1 AND SLAB2 OF SHEET M5

6. FOOTINGS HAVE BEEN DESIGNED FOR CLASS 5 SOIL. ALLOWABLE FOUNDATION PRESSURE IS 1500 POUNDS PER SQUARE FOOT. LATERAL BEARING PRESSURE IS 100 PSF/FT AND IS DOUBLED PER 1804.3.1. THESE DESIGN VALUES DO NOT APPLY TO MUD, ORGANIC SILTS, ORGANIC CLAYS, PEAT OR UNPREPARED FILLS AND MAY REQUIRE FURTHER SOIL INVESTIGATION. UNITS IN SNOW/LIVE LOAD AREA OF 25 PSF OR LESS MAY BE BUILT ON 1000 PSF BEARING SOIL W/O ADDITIONAL ENGINEERING.

7. 20 PSF AND HIGHER LIVE LOAD STRUCTURES MAY BE USED FOR PARKING OF MOTOR VEHICLES. CARPORTS MUST HAVE AT LEAST TWO OPEN SIDES AND HAVE FLOOR SURFACES MADE OF APPROVED NONCOMBUSTIBLE MATERIAL OR ASPHALT.

8. FREESTANDING STRUCTURES SHALL NOT BE ENCLOSED IN ANY MANNER.

9. STEEL BOLTS SHALL BE ASTM A-307 AND HOT DIPPED GALVANIZED, MECHANICALLY GALVANIZED, ZINC ELECTROPLATED, ALUMINIZED OR 3000 SERIES STAINLESS STEEL

10. ALTERNATE ALUMINUM ALLOYS OF EQUAL OR HIGHER STRENGTHS MAY BE USED.

11. STEEL FASTENERS SHALL BE EITHER STAINLESS (3000 SERIES), GALVANIZED OR DOUBLE CADMIUM PLATED. CONCRETE ANCHOR BOLTS ARE 3/8" W/ 2" EMBED STAINLESS STEEL HILTI KWIK BOLT TZ (ICC ESR 1917) OR EQUIVALENT. ANCHORS ATTACHED TO CONCRETE SLAB WILL HAVE ALLOWABLE TENSILE OF 750 LBF AND SHEAR OF 500 LBF.

12. EMBEDDED POST SURFACES SHALL BE CLEAN AND FREE FROM OILY SURFACES.

13. HEADER SPLICES SHALL NOT BE LOCATED NEARER TO THE END OF THE STRUCTURE THAN THE FIRST INTERIOR POST. (EXCEPT FOR FULL STRENGTH SPLICES) FULL STRENGTH SPLICES (DETAILS O, U, AND X) MAY BE LOCATED ANYWHERE.

14. ALL SELF DRILLING AND SELF TAPPING SCREWS MUST COMPLY TO ICC ESR-5202, ESR-5623 OR EQUIVALENT.

15. ATTACHED STRUCTURES MAY NOT BE ENCLOSED IN ANY MANNER WITHOUT ADDITIONAL ENGINEERING ANALYIS OR APPROVAL OF THE LOCAL BUILDING AUTHORITY.

16. ROOF PANELS ARE CLASS "B" FIRE RATED.

17. STRUCTURES MAY BE ATTACHED TO EAVE OVERHANGS PER SCHEDULE.

18. WHERE ALUMINUM ALLOY PARTS ARE IN CONTACT WITH DISSIMILAR METALS OTHER THAN STAINLESS, ALUMINIZED OR GALVANIZED STEEL, OR ABSORBENT BUILDING MATERIALS, LIKELY TO BE CONTINUOUSLY OR INTERMITTENTLY WET, THE FAYING SURFACES SHALL BE PAINTED OR OTHERWISE SEPARATED IN ACCORDANCE WITH THE ALUMINUM DESIGN MANUAL PART I-A SECTION 6.6.1

19. WHEN A SINGLE SPAN ATTACHED UNIT IS ATTACHED TO A WOODEN DECK, THE MAXIMUM DEAD LOAD + LIVE LOAD FROM THE PATIO COVER IS 750LBS AND THE POST SPACING SHALL NOT EXCEED THAT SPECIFIED FOR ATTACHING TO A CONCRETE SLAB. THE MAXIMUM CONNECTION UPLIFT LOAD IS 800 LBS FOR 90MPH EXP C WIND SPEED. CONNECTIONS ARE FOR MAXIMUM PATIO ROOF HEIGHTS OF 12FT. THE EXISTING DECK STRUCTURE MUST BE ADEQUATE TO SUSTAIN THESE ADDITIONAL LOADS. THE STRUCTURAL ADEQUACY OF THE DECK TO SAFELY SUSTAIN THESE ADDITIONAL LOADS WILL REQUIRE APPROVAL BY LOCAL BUILDING AUTHORITY OR ADDITIONAL ENGINEERING. SEE DETAIL L13, L14, N12, N13, AL OR AM. THE MAXIMUM HEIGHT ABOVE GRADE IS 12. CONSTRUCTION OUTSIDE OF THESE PARAMETERS MAY REQUIRE ADDITIONAL ENGINEERING.

20. ANY UNIT BUILT WITH A ROOF SNOW LOAD GREATER THAN 30 PSF IN A SEISMICALLY ACTIVE AREA MAY REQUIRE ADDITIONAL ENGINEERING AT THE DISCRETION OF THE LOCAL BUILDING AUTHORITY. UNITS ATTACHED TO ONE AND TWO FAMILY DWELLINGS W/ Ss < 0.55, SITE CLASS D DO NOT REQUIRE ADDITIONAL SESIMIC ANALYSIS PER 1613.1 EXCEPTION #1.

21. DRIFTING SNOW IS ADDRESSED IN DETAIL BR. SLIDING SNOW IS BEYOND THE SCOPE OF THIS REPORT.

22. ALL MULTISPAN TABLES AND DETAILS ASSUME EQUAL SPANS WITHIN 20%. ALL SPECIFICATIONS MUST BE BASED ON LONGEST ACTUAL SPAN.

GENERAL NOTES FOR LATTICE STRUCTURES:
(PERTAINS TO LATTICE STRUCTURES ON DRAWINGS SC02-2006 AND LT01-2006 THRU LT03-2006.)

1. SEE GENERAL NOTES, SHEET 1, SECTION 4 FOR LIVE AND SNOW LOADS.

2. OPEN LATTICE STRUCTURES SHALL NOT BE ENCLOSED.

3. SINGLE SPAN LATTICE STRUCTURES THAT USE DETAILS L13, L14 OR L25 MUST COMPLY WITH TABLE L1 AND L2 ON SHEET M5.

REGISTERED PROFESSIONAL ENGINEER
CARL PUTNAM
C 68139
EXP. 6/30/2009
CIVIL
STATE OF CALIFORNIA

4/27/2009
ENGINEERS STAMP

Amerimax BUILDING PRODUCTS, INC.
5208 TENNYSON PARKWAY
SUITE 100
PLANO, TEXAS 75024

DRAWN BY: CMP		
SCALE: NONE	DRAWING OR PART NAME: GENERAL NOTES	
DATE:	DRAWING OR PART NUMBER: GN02-2006	SHEET 2 OF 2

NOTE: SEE SCHEDULE FOR POSTS. ALL POSTS TO BE INSTALLED VERTICALLY. MAY HAVE MORE THAN 2 POSTS (PER INTERMEDIATE BEAM).

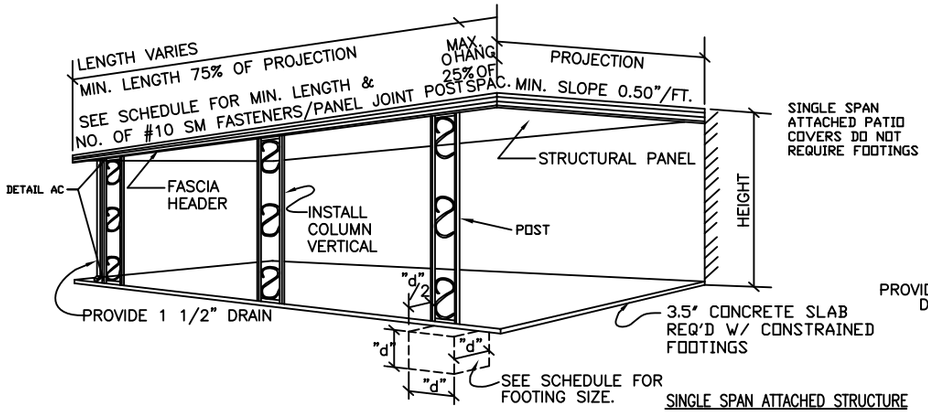

SINGLE SPAN ATTACHED STRUCTURE

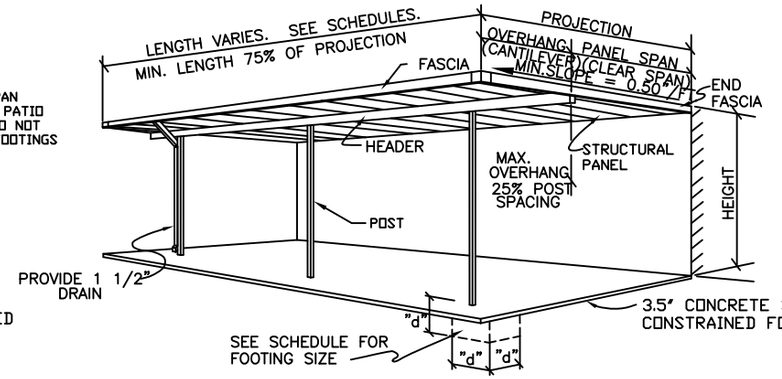

SINGLE SPAN ATTACHED CANTILEVERED STRUCTURE

MULTISPAN FREESTANDING STRUCTURE

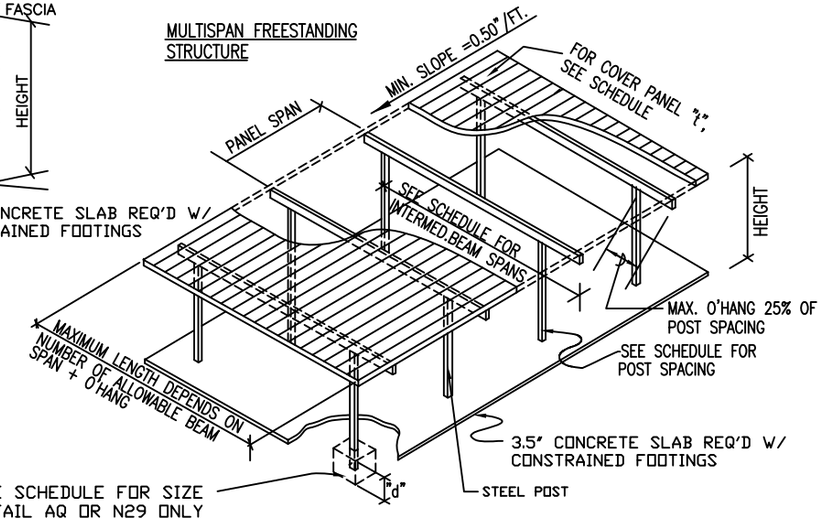

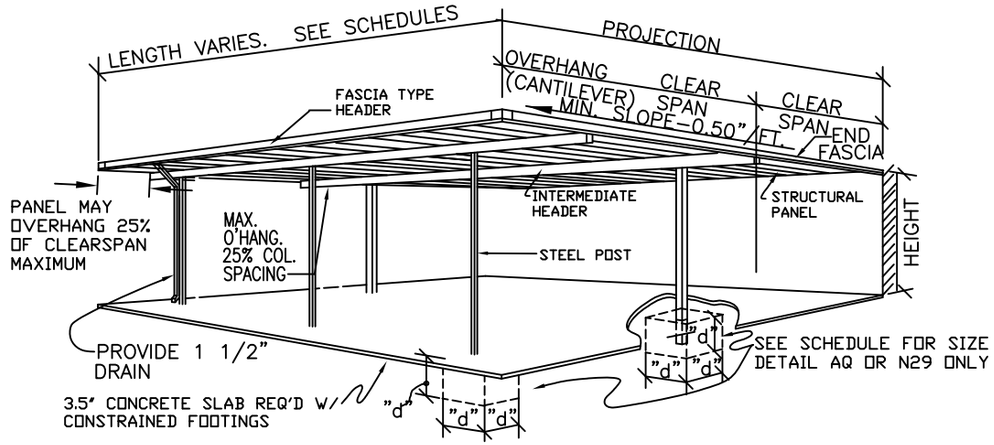

MULTISPAN ATTACHED CANTILEVERED STRUCTURE

SINGLE SPAN FREESTANDING STRUCTURE

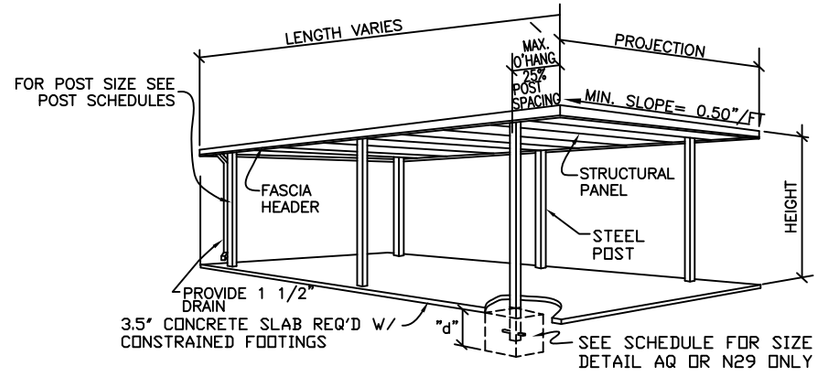

PATIO COVERS ARE LIMITED TO 12' HEIGHT. CARPORTS AND COMMERCIAL STRUCTURES ARE LIMITED TO 18' HEIGHT.

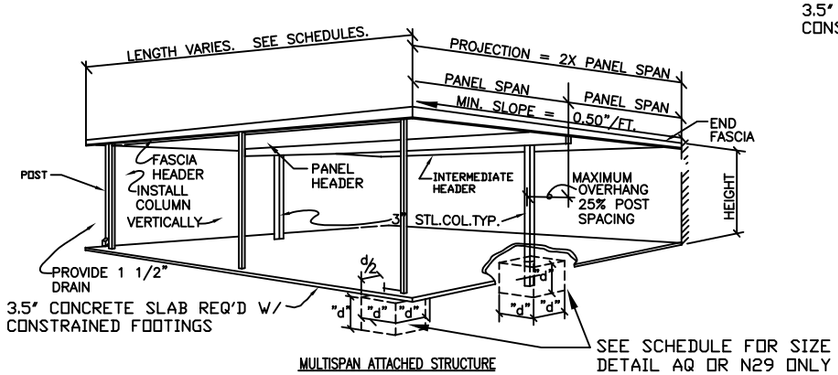

MULTISPAN ATTACHED STRUCTURE

4/27/2009
ENGINEERS STAMP

Amerimax BUILDING PRODUCTS, INC.
5208 TENNYSON PARKWAY
SUITE 100
PLANO, TEXAS 75024

DRAWN BY: CMP		
SCALE: NONE	DRAWING OR PART NAME	SOLID PANEL STRUCTURAL CONFIGURATIONS
DATE:	DRAWING OR PART NUMBER	SC01-2006 — SHEET 1 OF 4

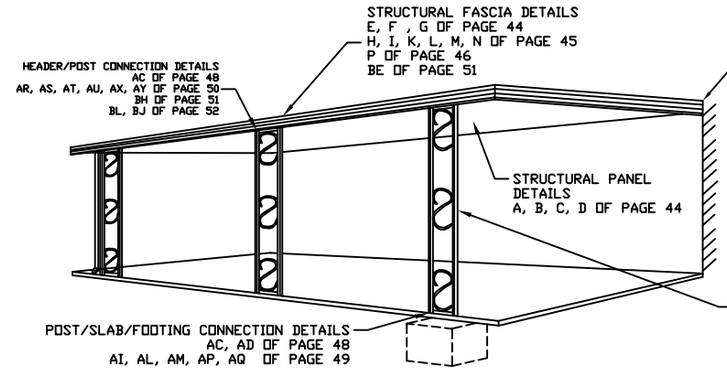

SINGLE SPAN ATTACHED STRUCTURE

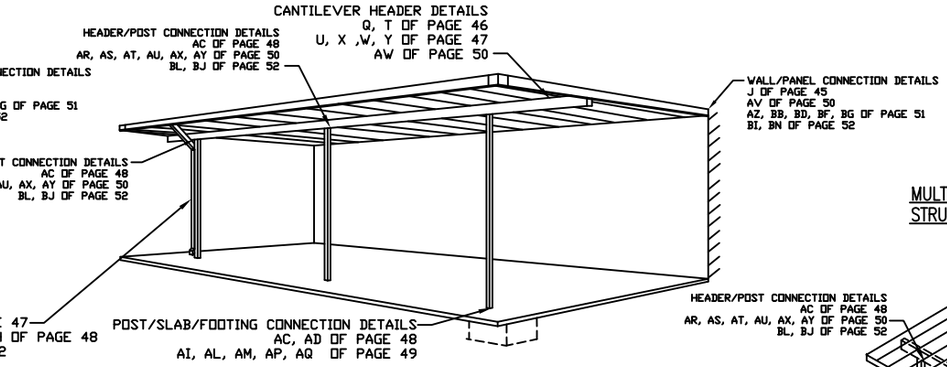

SINGLE SPAN ATTACHED CANTILEVERED STRUCTURE

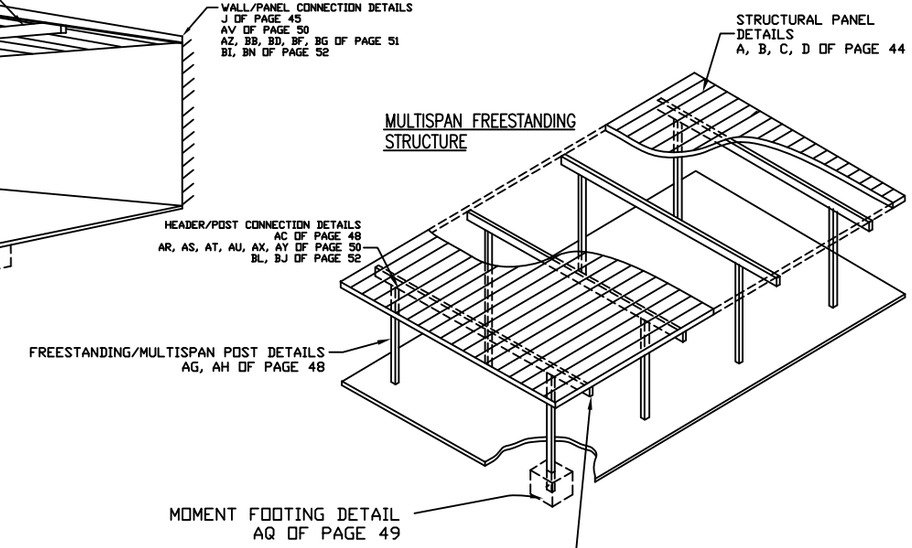

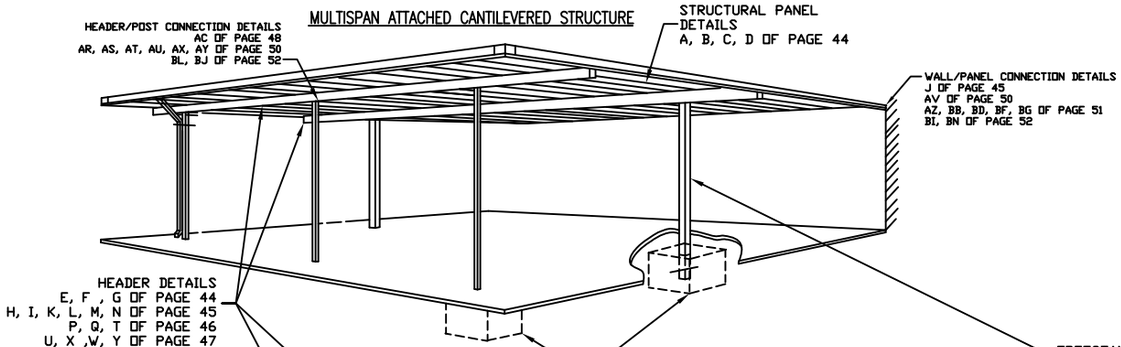

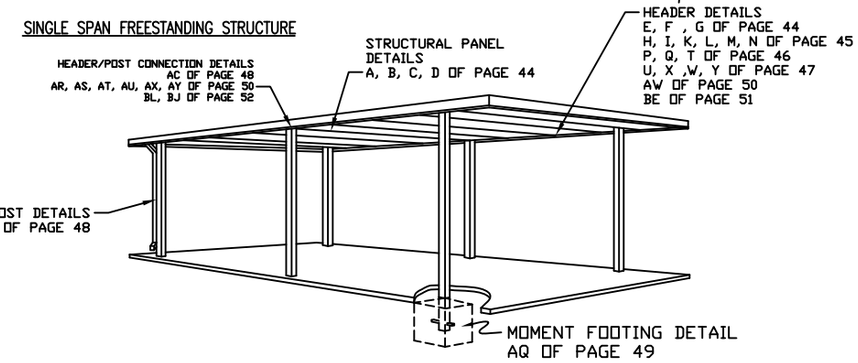

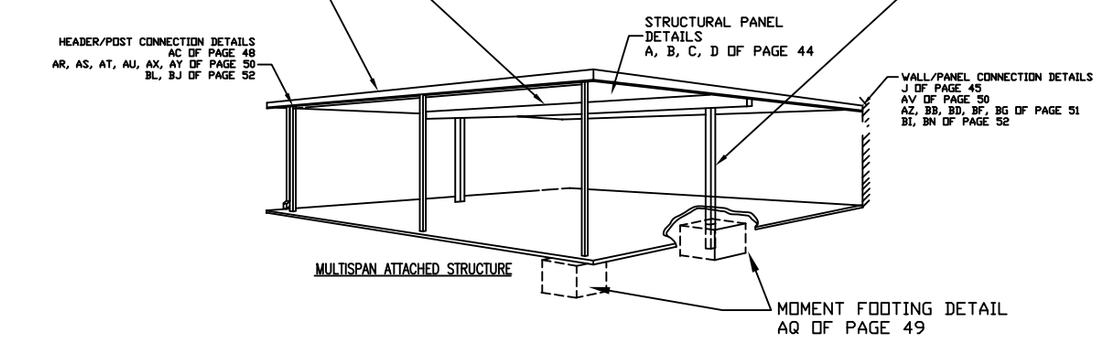

4/27/2009
ENGINEERS STAMP

Amerimax BUILDING PRODUCTS, INC.
5208 TENNYSON PARKWAY
SUITE 100
PLANO, TEXAS 75024

DRAWN BY: CMP			
SCALE: NONE	DRAWING OR PART NAME	SOLID PANEL DETAIL CALLOUTS	
DATE:	DRAWING OR PART NUMBER	SC02-2006	SHEET 2 OF 4

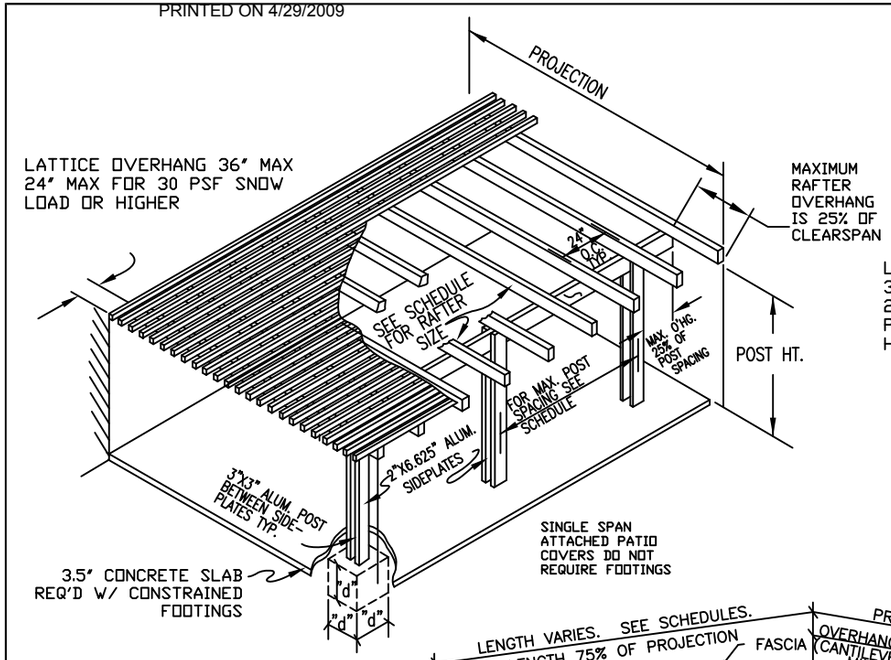

SINGLE SPAN ATTACHED
LATTICE STRUCTURE

MULTISPAN FREESTANDING
LATTICE STRUCTURE

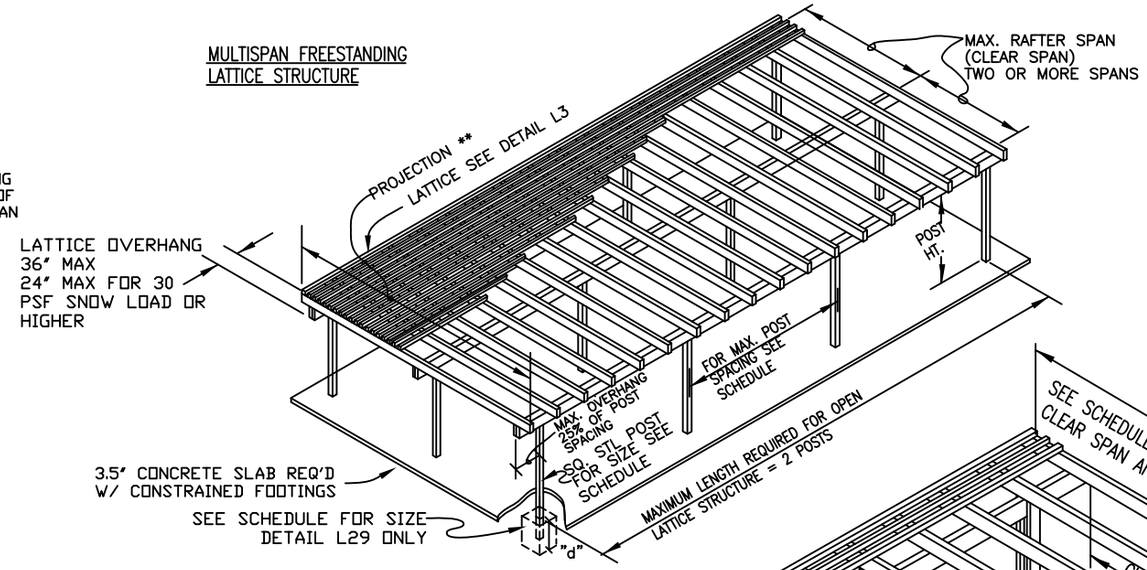

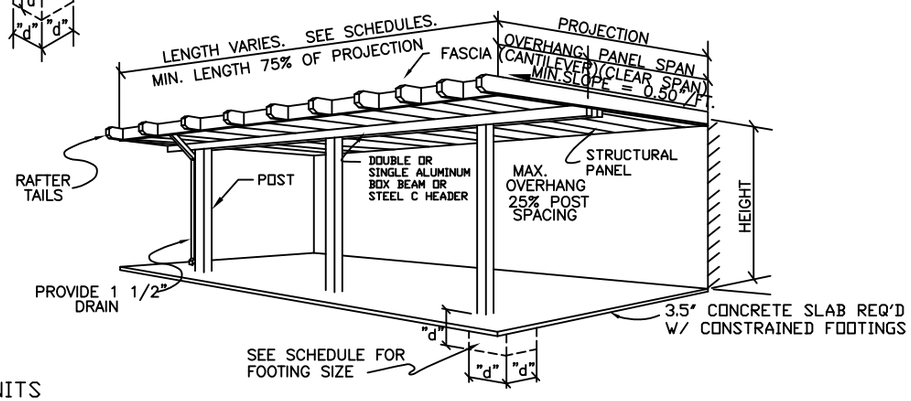

SINGLE SPAN ATTACHED CANTILEVERED STRUCTURE

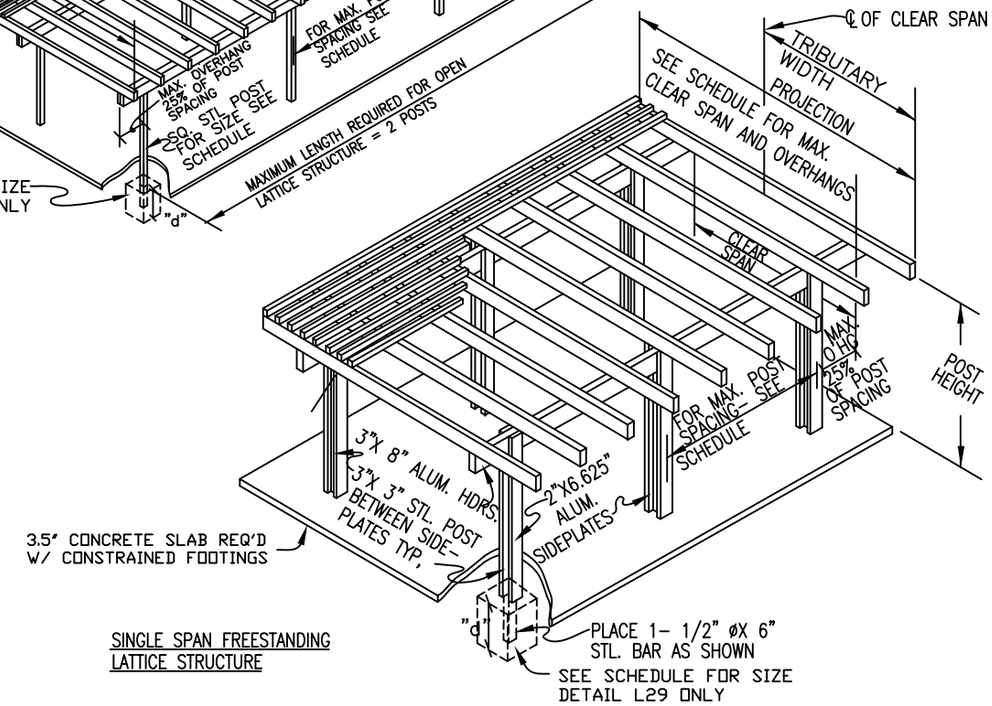

SINGLE SPAN FREESTANDING
LATTICE STRUCTURE

MULTISPAN UNITS
REFER TO GENERAL
NOTE 22.

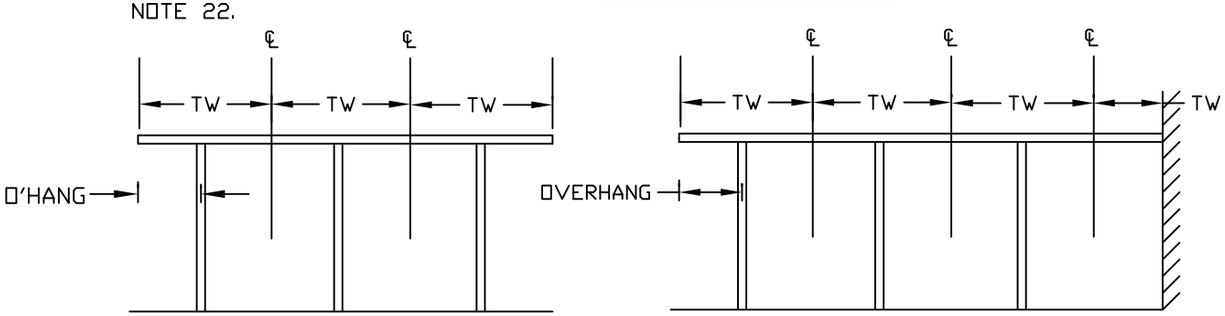

TRIBUTARY WIDTH (TW) DIAGRAM

4/27/2009
ENGINEERS STAMP

Amerimax BUILDING PRODUCTS, INC.
5208 TENNYSON PARKWAY
SUITE 100
PLANO, TEXAS 75024

DRAWN BY: CMP		
SCALE: NONE	DRAWING OR PART NAME	ALUMAWOOD STRUCTURAL CONFIGURATIONS
DATE:	DRAWING OR PART NUMBER SC03-2006	SHEET 3 OF 4

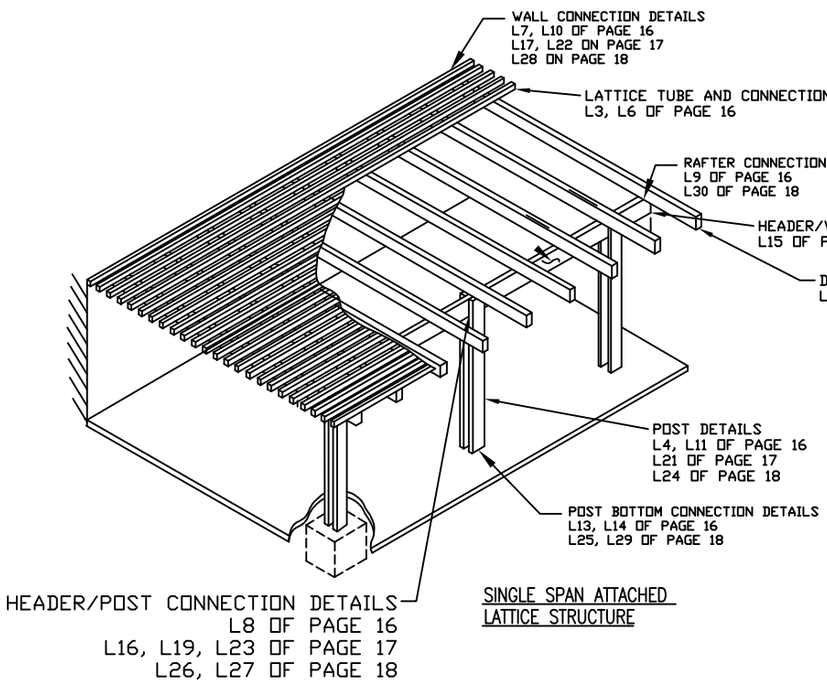

SINGLE SPAN ATTACHED LATTICE STRUCTURE

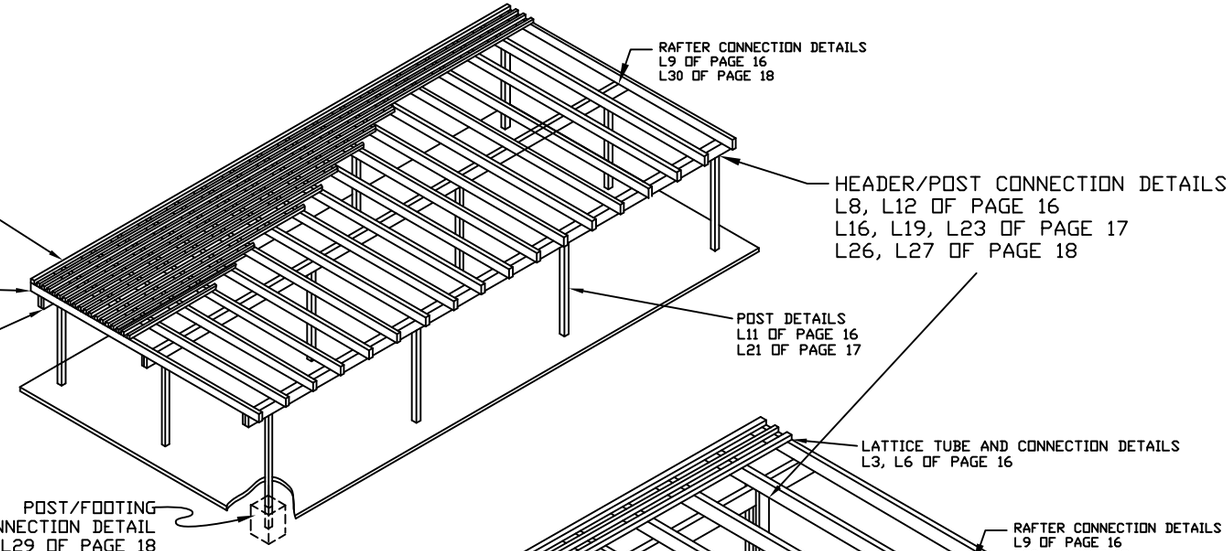

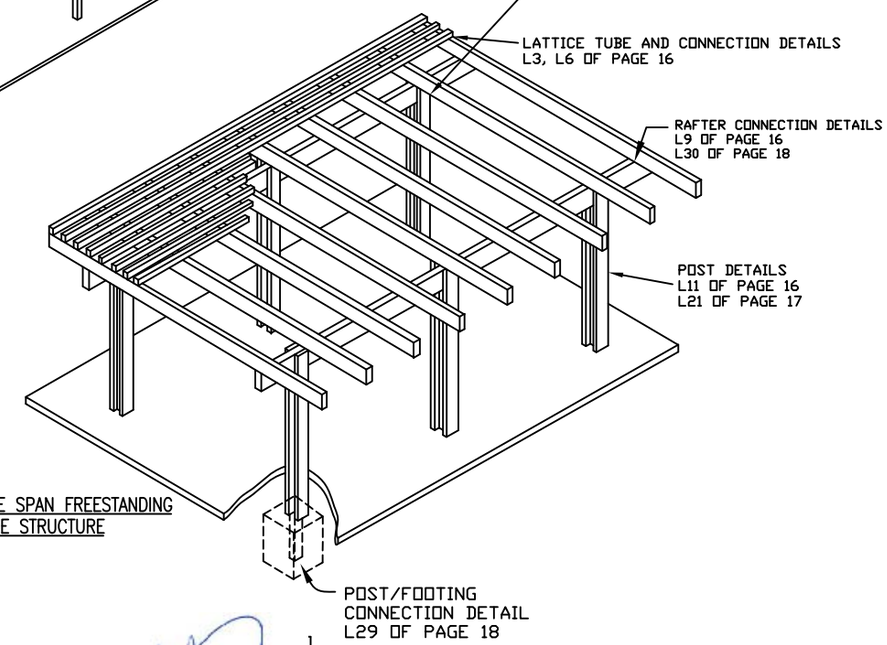

SINGLE SPAN FREESTANDING LATTICE STRUCTURE

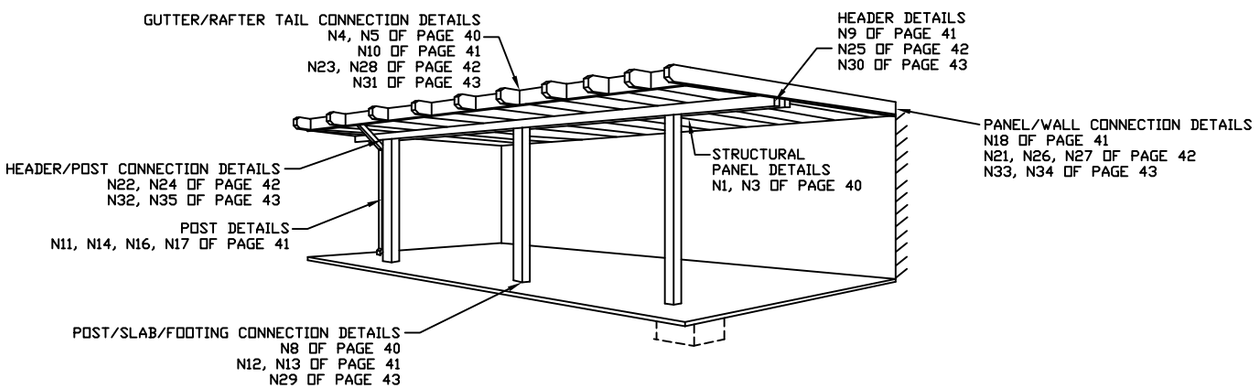

SINGLE SPAN ATTACHED CANTILEVERED STRUCTURE

4/27/2009

ENGINEERS STAMP

Amerimax BUILDING PRODUCTS, INC.

5208 TENNYSON PARKWAY
SUITE 100
PLANO, TEXAS 75024

DRAWN BY: CMP		
SCALE: NONE	DRAWING OR PART NAME: ALUMAWOOD DETAIL CALLOUTS	
DATE:	DRAWING OR PART NUMBER: SC04-2006	SHEET 4 OF 4

LATTICE 1.0 RAFTER SPANS FOR COMMERCIAL AND PATIO STRUCTURES

0.024"x2"x6.625" Rafter (Multispan)

Ground Snow Load (psf)	Rafter Spacing (in)	Wind Speed and Exposure Exposure C 90	110	120	130
10 LIVE	24"	7'-11"	7'-11"	6'-11"	6'-0"
	20"	9'-0"	9'-0"	8'-0"	7'-0"
	16"	10'-5"	10'-5"	9'-5"	8'-3"
	12"	12'-6"	12'-6"	10'-6"	8'-11"
20 LIVE	24"	4'-8"	4'-8"	4'-8"	4'-8"
	20"	5'-5"	5'-5"	5'-5"	5'-5"
	16"	6'-5"	6'-5"	6'-5"	6'-5"
	12"	7'-11"	7'-11"	7'-11"	7'-11"
25	24"	4'-6"	4'-6"	4'-6"	4'-6"
	20"	5'-2"	5'-2"	5'-2"	5'-2"
	16"	6'-2"	6'-2"	6'-2"	6'-2"
	12"	7'-8"	7'-8"	7'-8"	7'-8"
30	24"	3'-10"	3'-10"	3'-10"	3'-10"
	20"	4'-6"	4'-6"	4'-6"	4'-6"
	16"	5'-4"	5'-4"	5'-4"	5'-4"
	12"	6'-8"	6'-8"	6'-8"	6'-8"
40	24"	3'-0"	3'-0"	3'-0"	3'-0"
	20"	3'-6"	3'-6"	3'-6"	3'-6"
	16"	4'-3"	4'-3"	4'-3"	4'-3"
	12"	5'-4"	5'-4"	5'-4"	5'-4"
60	24"	2'-0"	2'-0"	2'-0"	2'-0"
	20"	2'-5"	2'-5"	2'-5"	2'-5"
	16"	3'-0"	3'-0"	3'-0"	3'-0"
	12"	3'-10"	3'-10"	3'-10"	3'-10"

TABLE 1.1

0.032"x2"x6.625" Rafter (Multispan)

Ground Snow Load (psf)	Rafter Spacing (in)	Wind Speed and Exposure Exposure C 90	110	120	130
10 LIVE	24"	11'-7"	11'-7"	11'-7"	11'-1"
	20"	13'-0"	13'-0"	13'-0"	12'-5"
	16"	14'-11"	14'-11"	14'-11"	14'-1"
	12"	17'-7"	17'-7"	17'-7"	16'-5"
20 LIVE	24"	7'-2"	7'-2"	7'-2"	7'-2"
	20"	8'-2"	8'-2"	8'-2"	8'-2"
	16"	9'-7"	9'-7"	9'-7"	9'-7"
	12"	11'-7"	11'-7"	11'-7"	11'-7"
25	24"	6'-11"	6'-11"	6'-11"	6'-11"
	20"	7'-11"	7'-11"	7'-11"	7'-11"
	16"	9'-3"	9'-3"	9'-3"	9'-3"
	12"	11'-3"	11'-3"	11'-3"	11'-3"
30	24"	6'-0"	6'-0"	6'-0"	6'-0"
	20"	6'-11"	6'-11"	6'-11"	6'-11"
	16"	8'-2"	8'-2"	8'-2"	8'-2"
	12"	9'-11"	9'-11"	9'-11"	9'-11"
40	24"	4'-10"	4'-10"	4'-10"	4'-10"
	20"	5'-7"	5'-7"	5'-7"	5'-7"
	16"	6'-7"	6'-7"	6'-7"	6'-7"
	12"	8'-2"	8'-2"	8'-2"	8'-2"
60	24"	3'-5"	3'-5"	3'-5"	3'-5"
	20"	4'-0"	4'-0"	4'-0"	4'-0"
	16"	4'-10"	4'-10"	4'-10"	4'-10"
	12"	6'-0"	6'-0"	6'-0"	6'-0"

TABLE 1.2

0.040"x2"x6.625" Rafter (Multispan)

Ground Snow Load (psf)	Rafter Spacing (in)	Wind Speed and Exposure Exposure C 90	110	120	130
10 LIVE	24"	15'-6"	15'-6"	15'-6"	15'-6"
	20"	17'-3"	17'-3"	17'-3"	17'-0"
	16"	19'-7"	19'-7"	19'-7"	18'-10"
	12"	22'-4"	22'-4"	21'-8"	20'-6"
20 LIVE	24"	9'-11"	9'-11"	9'-11"	9'-11"
	20"	11'-2"	11'-2"	11'-2"	11'-2"
	16"	12'-11"	12'-11"	12'-11"	12'-11"
	12"	15'-6"	15'-6"	15'-6"	15'-6"
25	24"	9'-7"	9'-7"	9'-7"	9'-7"
	20"	10'-10"	10'-10"	10'-10"	10'-10"
	16"	12'-6"	12'-6"	12'-6"	12'-6"
	12"	15'-0"	15'-0"	15'-0"	15'-0"
30	24"	8'-5"	8'-5"	8'-5"	8'-5"
	20"	9'-7"	9'-7"	9'-7"	9'-7"
	16"	11'-2"	11'-2"	11'-2"	11'-2"
	12"	13'-5"	13'-5"	13'-5"	13'-5"
40	24"	6'-9"	6'-9"	6'-9"	6'-9"
	20"	7'-9"	7'-9"	7'-9"	7'-9"
	16"	9'-2"	9'-2"	9'-2"	9'-2"
	12"	11'-2"	11'-2"	11'-2"	11'-2"
60	24"	4'-11"	4'-11"	4'-11"	4'-11"
	20"	5'-8"	5'-8"	5'-8"	5'-8"
	16"	6'-9"	6'-9"	6'-9"	6'-9"
	12"	8'-5"	8'-5"	8'-5"	8'-5"

TABLE 1.3

0.042"x3"x8" Rafter (Multispan)

Ground Snow Load (psf)	Rafter Spacing (in)	Wind Speed and Exposure Exposure C 90	110	120	130
10 LIVE	36"	13'-4"	13'-4"	13'-4"	13'-4"
	30"	15'-0"	15'-0"	15'-0"	14'-11"
	24"	17'-2"	17'-2"	17'-2"	16'-11"
	16"	21'-9"	21'-9"	21'-9"	20'-10"
20 LIVE	36"	8'-2"	8'-2"	8'-2"	8'-2"
	30"	9'-4"	9'-4"	9'-4"	9'-4"
	24"	11'-0"	11'-0"	11'-0"	11'-0"
	16"	14'-4"	14'-4"	14'-4"	14'-4"
25	36"	7'-10"	7'-10"	7'-10"	7'-10"
	30"	9'-0"	9'-0"	9'-0"	9'-0"
	24"	10'-7"	10'-7"	10'-7"	10'-7"
	16"	13'-11"	13'-11"	13'-11"	13'-11"
30	36"	6'-10"	6'-10"	6'-10"	6'-10"
	30"	7'-10"	7'-10"	7'-10"	7'-10"
	24"	9'-4"	9'-4"	9'-4"	9'-4"
	16"	12'-4"	12'-4"	12'-4"	12'-4"
40	36"	5'-5"	5'-5"	5'-5"	5'-5"
	30"	6'-3"	6'-3"	6'-3"	6'-3"
	24"	7'-6"	7'-6"	7'-6"	7'-6"
	16"	10'-2"	10'-2"	10'-2"	10'-2"
60	36"	3'-10"	3'-10"	3'-10"	3'-10"
	30"	4'-6"	4'-6"	4'-6"	4'-6"
	24"	5'-5"	5'-5"	5'-5"	5'-5"
	16"	7'-6"	7'-6"	7'-6"	7'-6"

TABLE 1.4

3"x3" Rafter @6" o/c (Multispan or Single)

Ground Snow Load (psf)	Rafter Spacing (in)	Wind Speed and Exposure Exposure C 90	110	120	130
10 LIVE	0.024"	11'-8"	11'-8"	11'-8"	11'-8"
	0.040"	16'-5"	16'-5"	16'-5"	15'-10"
20 LIVE	0.024"	7'-11"	7'-11"	7'-11"	7'-11"
	0.040"	13'-0"	13'-0"	13'-0"	13'-0"
25	0.024"	7'-8"	7'-8"	7'-8"	7'-8"
	0.040"	12'-10"	12'-10"	12'-10"	12'-10"
30	0.024"	6'-11"	6'-11"	6'-11"	6'-11"
	0.040"	12'-0"	12'-0"	12'-0"	12'-0"
40	0.024"	5'-9"	5'-9"	5'-9"	5'-9"
	0.040"	10'-6"	10'-6"	10'-6"	10'-6"
60	0.024"	4'-5"	4'-5"	4'-5"	4'-5"
	0.040"	8'-4"	8'-4"	8'-4"	8'-4"

TABLE 1.5

Amerimax Building Products
5208 Tennyson Parkway
Plano, Texas 75024

Carl Putnam, P. E.
3441 Ivylink Place
Lynchburg, VA 24503
carlputnam@comcast.net

SINGLE SPAN TABLES

NOTE: RAFTERS MAY OVERHANG 25% OF THEIR CLEARSPAN

RAFTERS O/C SPACING MAY BE DOUBLED IF THE RAFTERS ARE DOUBLED UP TO 48" O/C

0.024"x2"x6.625" Rafter (Single Span)

Ground Snow Load (psf)	Rafter Spacing (in)	Wind Speed and Exposure Exposure C 90	110	120	130
10 LIVE	24"	10'-3"	8'-0"	6'-11"	6'-0"
	20"	11'-10"	9'-2"	8'-0"	7'-0"
	16"	13'-2"	10'-9"	9'-5"	8'-3"
	12"	15'-2"	12'-6"	10'-6"	8'-11"
20 LIVE	24"	5'-2"	5'-2"	5'-2"	5'-2"
	20"	6'-3"	6'-3"	6'-3"	6'-3"
	16"	7'-9"	7'-9"	7'-9"	7'-9"
	12"	10'-3"	10'-3"	10'-3"	8'-11"
25	24"	4'-11"	4'-11"	4'-11"	4'-11"
	20"	5'-11"	5'-11"	5'-11"	5'-11"
	16"	7'-5"	7'-5"	7'-5"	7'-5"
	12"	9'-10"	9'-10"	9'-10"	8'-11"
30	24"	4'-1"	4'-1"	4'-1"	4'-1"
	20"	4'-11"	4'-11"	4'-11"	4'-11"
	16"	6'-2"	6'-2"	6'-2"	6'-2"
	12"	8'-2"	8'-2"	8'-2"	8'-2"
40	24"	3'-1"	3'-1"	3'-1"	3'-1"
	20"	3'-8"	3'-8"	3'-8"	3'-8"
	16"	4'-8"	4'-8"	4'-8"	4'-8"
	12"	6'-2"	6'-2"	6'-2"	6'-2"
60	24"	2'-1"	2'-1"	2'-1"	2'-1"
	20"	2'-6"	2'-6"	2'-6"	2'-6"
	16"	3'-1"	3'-1"	3'-1"	3'-1"
	12"	4'-1"	4'-1"	4'-1"	4'-1"

TABLE 1.6

0.032"x2"x6.625" Rafter (Single Span)

Ground Snow Load (psf)	Rafter Spacing (in)	Wind Speed and Exposure Exposure C 90	110	120	130
10 LIVE	24"	14'-7"	13'-9"	12'-4"	11'-1"
	20"	16'-0"	15'-4"	13'-9"	12'-5"
	16"	17'-9"	17'-4"	15'-7"	14'-1"
	12"	19'-8"	19'-8"	18'-1"	16'-5"
20 LIVE	24"	9'-4"	9'-4"	9'-4"	9'-4"
	20"	11'-2"	11'-2"	11'-2"	11'-2"
	16"	12'-8"	12'-8"	12'-8"	12'-8"
	12"	14'-7"	14'-7"	14'-7"	14'-7"
25	24"	8'-11"	8'-11"	8'-11"	8'-11"
	20"	10'-8"	10'-8"	10'-8"	10'-8"
	16"	12'-5"	12'-5"	12'-5"	12'-5"
	12"	14'-3"	14'-3"	14'-3"	14'-3"
30	24"	7'-5"	7'-5"	7'-5"	7'-5"
	20"	8'-11"	8'-11"	8'-11"	8'-11"
	16"	11'-1"	11'-1"	11'-1"	11'-1"
	12"	13'-1"	13'-1"	13'-1"	13'-1"
40	24"	5'-7"	5'-7"	5'-7"	5'-7"
	20"	6'-8"	6'-8"	6'-8"	6'-8"
	16"	8'-4"	8'-4"	8'-4"	8'-4"
	12"	11'-1"	11'-1"	11'-1"	11'-1"
60	24"	3'-9"	3'-9"	3'-9"	3'-9"
	20"	4'-5"	4'-5"	4'-5"	4'-5"
	16"	5'-7"	5'-7"	5'-7"	5'-7"
	12"	7'-5"	7'-5"	7'-5"	7'-5"

TABLE 1.7

0.040"x2"x6.625" Rafter (Single Span)

Ground Snow Load (psf)	Rafter Spacing (in)	Wind Speed and Exposure Exposure C 90	110	120	130
10 LIVE	24"	17'-8"	17'-8"	17'-0"	15'-6"
	20"	18'-10"	18'-10"	18'-7"	17'-0"
	16"	20'-3"	20'-3"	19'-11"	18'-10"
	12"	22'-4"	22'-4"	21'-8"	20'-6"
20 LIVE	24"	13'-2"	13'-2"	13'-2"	13'-2"
	20"	14'-5"	14'-5"	14'-5"	14'-5"
	16"	16'-1"	16'-1"	16'-1"	16'-1"
	12"	17'-8"	17'-8"	17'-8"	17'-8"
25	24"	12'-10"	12'-10"	12'-10"	12'-10"
	20"	14'-1"	14'-1"	14'-1"	14'-1"
	16"	15'-8"	15'-8"	15'-8"	15'-8"
	12"	17'-5"	17'-5"	17'-5"	17'-5"
30	24"	11'-2"	11'-2"	11'-2"	11'-2"
	20"	12'-10"	12'-10"	12'-10"	12'-10"
	16"	14'-4"	14'-4"	14'-4"	14'-4"
	12"	16'-5"	16'-5"	16'-5"	16'-5"
40	24"	8'-5"	8'-5"	8'-5"	8'-5"
	20"	10'-1"	10'-1"	10'-1"	10'-1"
	16"	12'-6"	12'-6"	12'-6"	12'-6"
	12"	14'-4"	14'-4"	14'-4"	14'-4"
60	24"	5'-7"	5'-7"	5'-7"	5'-7"
	20"	6'-9"	6'-9"	6'-9"	6'-9"
	16"	8'-5"	8'-5"	8'-5"	8'-5"
	12"	11'-2"	11'-2"	11'-2"	11'-2"

TABLE 1.8

0.042"x3"x8" Rafter (Single Span)

Ground Snow Load (psf)	Rafter Spacing (in)	Wind Speed and Exposure Exposure C 90	110	120	130
10 LIVE	36"	17'-1"	16'-6"	14'-10"	13'-5"
	30"	18'-8"	18'-4"	16'-6"	14'-11"
	24"	20'-9"	20'-8"	18'-7"	16'-11"
	16"	25'-1"	25'-1"	22'-11"	20'-10"
20 LIVE	36"	10'-3"	10'-3"	10'-3"	10'-3"
	30"	12'-3"	12'-3"	12'-3"	12'-3"
	24"	14'-10"	14'-10"	14'-10"	14'-10"
	16"	18'-1"	18'-1"	18'-1"	18'-1"
25	36"	9'-9"	9'-9"	9'-9"	9'-9"
	30"	11'-8"	11'-8"	11'-8"	11'-8"
	24"	14'-6"	14'-6"	14'-6"	14'-6"
	16"	17'-8"	17'-8"	17'-8"	17'-8"
30	36"	8'-2"	8'-2"	8'-2"	8'-2"
	30"	9'-9"	9'-9"	9'-9"	9'-9"
	24"	12'-2"	12'-2"	12'-2"	12'-2"
	16"	16'-2"	16'-2"	16'-2"	16'-2"
40	36"	6'-2"	6'-2"	6'-2"	6'-2"
	30"	7'-4"	7'-4"	7'-4"	7'-4"
	24"	9'-2"	9'-2"	9'-2"	9'-2"
	16"	13'-8"	13'-8"	13'-8"	13'-8"
60	36"	4'-1"	4'-1"	4'-1"	4'-1"
	30"	4'-11"	4'-11"	4'-11"	4'-11"
	24"	6'-2"	6'-2"	6'-2"	6'-2"
	16"	9'-2"	9'-2"	9'-2"	9'-2"

TABLE 1.9

4/27/2009

SINGLE SPAN TABLES

LATTICE COVER 2.0 POST SPACINGS FOR PATIO AND COMMERCIAL COVERS 90 MPH WIND AREAS

TABLE 2.1

GROUND SNOW LOAD (PSF)	TRIB WIDTH (FT)	MAX POST SPACING ON SLAB (FT)	POST REQ'D FOR SLAB	0.042"x3"x8" Box Beam (Detail L1) MAX POST SPACING (FT)	Attached Structure MIN POST TYPE	Attached Structure FOOTER SIZE "d" (in)	Freestanding or Multispan Units MAX POST LENGTH 8' CONSTRAINED FOOTER "d" (in)	10' CONSTRAINED FOOTER "d" (in)	12' CONSTRAINED FOOTER "d" (in)	Double 0.042"x3"x8" Box Beam (Detail L12) MAX POST SPACING (FT)	Attached Structure MIN POST TYPE	Attached Structure FOOTER SIZE "d" (in)	Freestanding or Multispan Units MAX POST LENGTH 8' CONSTRAINED FOOTER "d" (in)	10' CONSTRAINED FOOTER "d" (in)	12' CONSTRAINED FOOTER "d" (in)	Double 0.032"x2"x6.625" Box Beam (Detail L12) MAX POST SPACING (FT)	Attached Structure MIN POST TYPE	Attached Structure FOOTER SIZE "d" (in)	Freestanding or Multispan Units MAX POST LENGTH 8' CONSTRAINED FOOTER "d" (in)	10' CONSTRAINED FOOTER "d" (in)	12' CONSTRAINED FOOTER "d" (in)
90 MPH EXPOSURE B																					
10 LIVE	3	22'-8"	A	15'-0"	A	17	24	25	26	22'-2"	A	19	26	27	29	15'-8"	A	17	23	24	26
	3.5	19'-5"	A	13'-6"	A	17	23	25	26	20'-7"	B	20	25	27	28	14'-2"	A	18	22	24	25
	4	17'-0"	A	12'-3"	A	18	23	24	25	19'-3"	B	20	25	27	28	12'-11"	A	18	22	23	25
	4.5	15'-1"	A	11'-2"	A	18	22	24	25	18'-2"	B	21	25	26	28	11'-11"	A	18	22	23	24
	5	13'-7"	A	10'-4"	A	18	22	23	24	17'-3"	B	21	24	26	27	11'-0"	A	18	21	23	24
	5.5	12'-4"	A	9'-7"	A	18	22	23	24	16'-2"	B	21	24	26	27	10'-3"	A	18	21	22	24
	6	11'-4"	A	8'-11"	A	18	21	23	24	15'-2"	B	22	24	25	27	9'-8"	A	19	21	22	23
	6.5	10'-5"	A	8'-5"	A	18	21	22	23	14'-4"	C	22	23	25	26	9'-1"	A	19	20	22	23
	7	9'-8"	A	7'-11"	A	18	21	22	23	13'-7"	C	22	23	25	26	8'-7"	A	19	20	22	23
	7.5	9'-1"	A	7'-5"	A	18	20	22	23	12'-11"	C	22	23	24	26	8'-1"	A	19	20	21	22
	8	8'-6"	A	7'-1"	A	18	20	22	23	12'-4"	C	22	23	24	25	7'-9"	A	19	20	21	22
	8.5	8'-0"	A	6'-9"	A	19	20	21	22	11'-9"	C	22	22	24	25	7'-4"	A	19	20	21	22
	9	7'-6"	A	6'-5"	A	19	20	21	22	11'-3"	C	22	22	24	25	7'-0"	A	19	19	21	22
	9.5	7'-2"	A	6'-1"	A	19	20	21	22	10'-10"	C	23	23	23	25	6'-9"	A	19	19	21	22
	10	6'-9"	A	5'-10"	A	19	19	21	22	10'-5"	C	23	23	23	25	6'-5"	A	19	19	20	22
	11	6'-2"	A	5'-4"	A	19	19	20	22	9'-8"	C	23	23	23	24	5'-11"	A	19	19	20	21
	12	5'-8"	A	5'-0"	A	19	19	20	22	9'-0"	C	23	23	23	24	5'-6"	A	20	20	20	22
	13	5'-2"	A	4'-7"	A	19	19	21	22	8'-5"	C	23	23	23	23	5'-2"	A	20	20	21	22
90 MPH EXPOSURE C																					
10 LIVE	3	22'-8"	A	15'-0"	A	20	26	28	29	22'-2"	A	22	29	30	32	15'-8"	A	20	25	27	28
	3.5	19'-5"	A	13'-6"	A	20	26	27	29	20'-7"	B	23	28	30	31	14'-2"	A	20	25	26	28
	4	17'-0"	A	12'-3"	A	20	25	27	28	19'-3"	B	24	28	30	31	12'-11"	A	21	24	26	27
	4.5	15'-1"	A	11'-2"	A	20	25	26	28	18'-2"	B	24	27	29	31	11'-11"	A	21	24	26	27
	5	13'-7"	A	10'-4"	A	21	24	26	27	17'-3"	B	24	27	29	30	11'-0"	A	21	24	25	26
	5.5	12'-4"	A	9'-7"	A	21	24	25	27	16'-2"	B	25	27	28	30	10'-3"	A	21	23	25	26
	6	11'-4"	A	8'-11"	A	21	23	25	26	15'-2"	B	25	26	28	29	9'-8"	A	21	23	24	26
	6.5	10'-5"	A	8'-5"	A	21	23	25	26	14'-4"	C	25	26	28	29	9'-1"	A	22	23	24	25
	7	9'-8"	A	7'-11"	A	21	23	24	26	13'-7"	C	25	26	27	29	8'-7"	A	22	22	24	25
	7.5	9'-1"	A	7'-5"	A	21	23	24	25	12'-11"	C	25	25	27	28	8'-1"	A	22	22	24	25
	8	8'-6"	A	7'-1"	A	21	22	24	25	12'-4"	C	26	26	27	28	7'-9"	A	22	22	23	25
	8.5	8'-0"	A	6'-9"	A	21	22	24	25	11'-9"	C	26	26	26	28	7'-4"	A	22	22	23	24
	9	7'-6"	A	6'-5"	A	21	22	23	25	11'-3"	C	26	26	26	28	7'-0"	A	22	22	23	24
	9.5	7'-2"	A	6'-1"	A	21	22	23	24	10'-10"	C	26	26	26	27	6'-9"	A	22	22	23	24
	10	6'-9"	A	5'-10"	A	21	22	23	24	10'-5"	C	26	26	26	27	6'-5"	A	22	22	23	24
	11	6'-2"	A	5'-4"	A	22	22	23	24	9'-8"	C	26	26	26	27	5'-11"	A	22	22	22	24
	12	5'-8"	A	5'-0"	A	22	22	23	24	9'-0"	C	26	26	26	26	5'-6"	A	22	22	23	24
	13	5'-2"	A	4'-7"	A	22	22	23	24	8'-5"	C	27	27	27	27	5'-2"	A	23	23	23	24
90 MPH EXPOSURE B																					
20 LIVE	3	11'-10"	A	9'-4"	A	15	21	23	24	15'-9"	B	17	24	25	27	10'-1"	A	15	21	22	23
	3.5	10'-2"	A	8'-3"	A	15	21	22	23	14'-2"	C	18	23	25	26	8'-11"	A	15	20	22	23
	4	8'-11"	A	7'-5"	A	15	20	22	23	12'-10"	C	18	23	24	26	8'-1"	A	15	20	21	22
	4.5	7'-11"	A	6'-8"	A	15	20	21	22	11'-9"	C	18	22	24	25	7'-4"	A	15	20	21	22
	5	7'-1"	A	6'-1"	A	15	20	21	22	10'-10"	C	18	22	23	25	6'-9"	A	16	19	21	22
	5.5	6'-5"	A	5'-8"	A	15	19	21	22	10'-1"	C	18	22	23	24	6'-3"	A	16	19	20	21
	6	5'-11"	A	5'-3"	A	15	19	20	21	9'-5"	C	18	21	23	24	5'-9"	A	16	19	20	21
	6.5	5'-5"	A	4'-10"	A	15	19	20	21	8'-10"	C	19	21	22	24	5'-5"	A	16	18	20	21
	7	5'-1"	A	4'-6"	A	15	19	20	21	8'-4"	C	19	21	22	23	5'-1"	B	16	18	20	21
	7.5	4'-9"	A	4'-3"	A	15	18	20	21	7'-10"	C	19	21	22	23	4'-9"	B	16	18	19	21
	8	4'-5"	A	4'-0"	A	15	18	19	21	7'-5"	C	19	20	22	23	4'-6"	B	16	18	19	20
	8.5	4'-2"	A	3'-10"	A	15	18	19	20	7'-1"	C	19	20	22	23	4'-3"	B	16	18	19	20
	9	3'-11"	A	3'-7"	A	15	18	19	21	6'-9"	C	19	20	21	23	4'-1"	B	16	18	19	21
	9.5	3'-9"	A	3'-5"	A	15	18	20	21	6'-5"	C	19	20	21	22	3'-10"	B	16	18	20	21
	10	3'-6"	A	3'-3"	A	15	18	20	21	6'-2"	C	19	20	21	22	3'-8"	B	16	18	20	21
	11	3'-2"	A	3'-0"	A	15	19	20	21	5'-8"	C	19	19	21	22	3'-5"	B	16	19	20	21
	12	2'-11"	A	2'-9"	A	15	19	20	22	5'-3"	C	19	19	20	22	3'-1"	B	16	19	20	22
	13	2'-8"	A	2'-6"	A	15	19	21	22	4'-10"	C	19	19	21	22	2'-11"	B	16	19	21	22

TABLE 2.1

GROUND SNOW LOAD (PSF)	TRIB WIDTH (FT)	MAX POST SPACING ON SLAB (FT)	POST REQ'D FOR SLAB	0.042"x3"x8" Box Beam (Detail L1) MAX POST SPACING (FT)	Attached Structure MIN POST TYPE	Attached Structure FOOTER SIZE "d" (in)	Freestanding or Multispan Units MAX POST LENGTH 8' CONSTRAINED FOOTER "d" (in)	10' CONSTRAINED FOOTER "d" (in)	12' CONSTRAINED FOOTER "d" (in)	Double 0.042"x3"x8" Box Beam (Detail L12) MAX POST SPACING (FT)	Attached Structure MIN POST TYPE	Attached Structure FOOTER SIZE "d" (in)	Freestanding or Multispan Units MAX POST LENGTH 8' CONSTRAINED FOOTER "d" (in)	10' CONSTRAINED FOOTER "d" (in)	12' CONSTRAINED FOOTER "d" (in)	Double 0.032"x2"x6.625" Box Beam (Detail	Attached Structure MIN POST TYPE	Attached Structure FOOTER SIZE "d" (in)	Freestanding or Multispan Units MAX POST LENGTH 8' CONSTRAINED FOOTER "d" (in)	10' CONSTRAINED FOOTER "d" (in)	12' CONSTRAINED FOOTER "d" (in)
90 MPH EXPOSURE B																					
30	3	8'-0"	A	7'-10"	A	14	21	22	23	13'-6"	C	17	23	25	26	8'-6"	B	14	20	22	23
	3.5	6'-10"	A	6'-11"	B	14	20	21	23	12'-1"	C	17	23	24	25	7'-6"	B	14	20	21	22
	4	6'-0"	A	6'-2"	B	14	20	21	22	10'-11"	C	17	22	24	25	6'-9"	B	14	19	21	22
	4.5	5'-4"	A	5'-6"	B	14	19	21	22	9'-11"	C	17	22	23	24	6'-2"	B	15	19	20	21
	5	4'-10"	A	5'-1"	B	14	19	20	21	9'-2"	C	17	21	23	24	5'-7"	B	15	19	20	21
	5.5	4'-4"	A	4'-8"	B	14	19	20	21	8'-6"	C	17	21	22	24	5'-2"	B	15	18	20	21
	6	4'-0"	A	4'-3"	B	14	18	20	21	7'-10"	C	17	21	22	23	4'-9"	B	15	18	19	21
	6.5	3'-8"	A	4'-0"	B	14	18	19	21	7'-4"	C	17	20	22	23	4'-6"	B	15	18	19	20
	7	3'-5"	A	3'-8"	B	14	18	19	20	6'-11"	C	18	20	21	23	4'-2"	B	15	18	19	20
	7.5	3'-2"	A	3'-6"	B	14	18	19	20	6'-6"	C	18	20	21	22	3'-11"	B	15	18	19	20
	8	3'-0"	A	3'-3"	B	14	18	19	20	6'-2"	C	18	20	21	22	3'-8"	B	15	18	19	20
	8.5	2'-10"	A	3'-1"	B	14	18	19	20	5'-10"	C	18	19	21	22	3'-6"	B	15	18	19	20
	9	2'-8"	A	2'-11"	B	14	18	19	21	5'-7"	C	18	19	21	22	3'-4"	B	15	18	19	21
	9.5	2'-6"	A	2'-9"	B	14	18	20	21	5'-4"	C	18	19	20	22	3'-2"	B	15	18	20	21
90 MPH EXPOSURE C																					
30	3	8'-0"	A	7'-10"	A	16	23	24	26	13'-6"	C	19	26	27	29	8'-6"	B	16	22	24	25
	3.5	6'-10"	A	6'-11"	B	16	22	24	25	12'-1"	C	19	25	27	28	7'-6"	B	16	22	23	25
	4	6'-0"	A	6'-2"	B	16	22	23	25	10'-11"	C	19	24	26	27	6'-9"	B	17	21	23	24
	4.5	5'-4"	A	5'-6"	B	16	21	23	24	9'-11"	C	20	24	26	27	6'-2"	B	17	21	22	24
	5	4'-10"	A	5'-1"	B	16	21	22	24	9'-2"	C	20	24	25	26	5'-7"	B	17	21	22	23
	5.5	4'-4"	A	4'-8"	B	16	21	22	23	8'-6"	C	20	23	25	26	5'-2"	B	17	20	22	23
	6	4'-0"	A	4'-3"	B	16	20	22	23	7'-10"	C	20	23	24	26	4'-9"	B	17	20	21	23
	6.5	3'-8"	A	4'-0"	B	16	20	21	23	7'-4"	C	20	23	24	25	4'-6"	B	17	20	21	22
	7	3'-5"	A	3'-8"	B	16	20	21	22	6'-11"	C	20	22	24	25	4'-2"	B	17	20	21	22
	7.5	3'-2"	A	3'-6"	B	16	20	21	22	6'-6"	C	20	22	23	25	3'-11"	B	17	19	21	22
	8	3'-0"	A	3'-3"	B	16	20	21	22	6'-2"	C	20	22	23	25	3'-8"	B	17	20	21	22
	8.5	2'-10"	A	3'-1"	B	17	20	21	23	5'-10"	C	20	22	23	24	3'-6"	B	17	20	21	23
	9	2'-8"	A	2'-11"	B	17	20	21	23	5'-7"	C	20	21	23	24	3'-4"	B	17	20	21	23
	9.5	2'-6"	A	2'-9"	B	17	20	22	23	5'-4"	C	20	21	23	24	3'-2"	B	17	20	22	23
40	3	6'-1"	A	6'-2"	B	15	22	23	25	11'-0"	C	18	25	26	27	6'-10"	B	15	21	23	24
	3.5	5'-2"	A	5'-5"	B	15	21	23	24	9'-9"	C	18	24	25	27	6'-0"	B	15	21	22	24
	4	4'-6"	A	4'-10"	B	15	21	22	23	8'-9"	C	18	23	25	26	5'-4"	B	15	20	22	23
	4.5	4'-0"	A	4'-4"	B	15	20	22	23	7'-11"	C	18	23	24	26	4'-10"	B	15	20	21	23
	5	3'-7"	A	3'-11"	B	15	20	21	23	7'-3"	C	18	22	24	25	4'-5"	B	16	20	21	22
	5.5	3'-3"	A	3'-7"	B	15	20	21	22	6'-9"	C	18	22	24	25	4'-1"	B	16	19	21	22
	6	3'-0"	A	3'-4"	B	15	19	21	22	6'-3"	C	19	22	23	25	3'-9"	B	16	19	21	22
	6.5	2'-9"	A	3'-1"	B	15	19	21	22	5'-10"	C	19	21	23	24	3'-6"	B	16	19	20	22
	7	2'-7"	A	2'-10"	B	15	19	21	22	5'-5"	C	19	21	23	24	3'-3"	B	16	19	21	22
	7.5	2'-5"	A	2'-8"	B	15	19	21	22	5'-1"	C	19	21	22	24	3'-1"	B	16	19	21	22
	8	2'-3"	A	2'-6"	B	15	20	21	22	4'-10"	C	19	21	22	23	2'-10"	B	16	20	21	22
	8.5	2'-1"	A	2'-4"	B	15	20	21	23	4'-7"	C	19	21	22	23	2'-8"	B	16	20	21	23
	9	2'-0"	A	2'-3"	B	15	20	21	23	4'-4"	C	19	20	22	23	2'-7"	B	16	20	21	23
90 MPH EXPOSURE B																					
40	3	6'-1"	A	6'-2"	B	13	20	21	22	11'-0"	C	15	22	24	25						
	3.5	5'-2"	A	5'-5"	B	13	19	20	22	9'-9"	C	16	22	23	24						
	4	4'-6"	A	4'-10"	B	13	19	20	21	8'-9"	C	16	21	22	24						
	4.5	4'-0"	A	4'-4"	B	13	18	20	21	7'-11"	C	16	21	22	23						
	5	3'-7"	A	3'-11"	B	13	18	19	20	7'-3"	C	16	20	22	23						
	5.5	3'-3"	A	3'-7"	B	13	18	19	20	6'-9"	C	16	20	21	22						
	6	3'-0"	A	3'-4"	B	13	17	19	20	6'-3"	C	16	20	21	22						
	6.5	2'-9"	A	3'-1"	B	13	17	19	20	5'-10"	C	16	19	21	22						
	7	2'-7"	A	2'-10"	B	13	17	19	20	5'-5"	C	16	19	20	22						
	7.5	2'-5"	A	2'-8"	B	13	18	19	20	5'-1"	C	16	19	20	21						
	8	2'-3"	A	2'-6"	B	13	18	19	20	4'-10"	C	16	19	20	21						
	8.5	2'-1"	A	2'-4"	B	13	18	19	20	4'-7"	C	16	19	20	21						
	9	2'-0"	A	2'-3"	B	13	18	19	21	4'-4"	C	16	18	20	21						

4/27/2009

LATTICE COVER 2.0 POST SPACINGS FOR PATIO AND COMMERCIAL COVERS 90 MPH WIND AREAS

TABLE 2.1

GROUND SNOW LOAD (PSF)	TRIB WIDTH (FT)	MAX POST SPACING ON SLAB (FT)	POST REQ'D FOR SLAB	0.042"x3"x8" Box Beam (Detail L1) MAX POST SPACING (FT)	Attached Structure MIN POST TYPE	Attached Structure FOOTER SIZE "d" (in)	Freestanding or Multispan Units MAX POST LENGTH 8' CONSTRAINED FOOTER "d" (in)	10' CONSTRAINED FOOTER "d" (in)	12' CONSTRAINED FOOTER "d" (in)	Double 0.042"x3"x8" Box Beam (Detail L12) MAX POST SPACING (FT)	Attached Structure MIN POST TYPE	Attached Structure FOOTER SIZE "d" (in)	Freestanding or Multispan Units MAX POST LENGTH 8' CONSTRAINED FOOTER "d" (in)	10' CONSTRAINED FOOTER "d" (in)	12' CONSTRAINED FOOTER "d" (in)	Double 0.032"x2"x6.625" Box Beam (Detail L12) MAX POST SPACING (FT)	Attached Structure MIN POST TYPE	Attached Structure FOOTER SIZE "d" (in)	Freestanding or Multispan Units MAX POST LENGTH 8' CONSTRAINED FOOTER "d" (in)	10' CONSTRAINED FOOTER "d" (in)	12' CONSTRAINED FOOTER "d" (in)
90 MPH EXPOSURE C																					
20 LIVE	3	11'-10"	A	9'-4"	A	17	24	25	27	15'-9"	B	20	27	28	30	10'-1"	A	17	23	25	26
	3.5	10'-2"	A	8'-3"	A	17	23	25	26	14'-2"	C	20	26	28	29	8'-11"	A	17	23	24	25
	4	8'-11"	A	7'-5"	A	17	23	24	25	12'-10"	C	21	25	27	28	8'-1"	A	18	22	24	25
	4.5	7'-11"	A	6'-8"	A	17	22	24	25	11'-9"	C	21	25	26	28	7'-4"	A	18	22	23	24
	5	7'-1"	A	6'-1"	A	17	22	23	24	10'-10"	C	21	24	26	27	6'-9"	A	18	21	23	24
	5.5	6'-5"	A	5'-8"	A	17	21	23	24	10'-1"	C	21	24	26	27	6'-3"	A	18	21	22	24
	6	5'-11"	A	5'-3"	A	17	21	23	24	9'-5"	C	21	24	25	27	5'-9"	A	18	21	22	23
	6.5	5'-5"	A	4'-10"	A	18	21	22	24	8'-10"	C	21	23	25	26	5'-5"	A	18	20	22	23
	7	5'-1"	A	4'-6"	A	18	21	22	23	8'-4"	C	21	23	25	26	5'-1"	B	18	20	22	23
	7.5	4'-9"	A	4'-3"	A	18	20	22	23	7'-10"	C	22	23	24	26	4'-9"	B	18	20	21	23
	8	4'-5"	A	4'-0"	A	18	20	21	23	7'-5"	C	22	23	24	25	4'-6"	B	18	20	21	23
	8.5	4'-2"	A	3'-10"	A	18	20	21	23	7'-1"	C	22	22	24	25	4'-3"	B	18	20	21	23
	9	3'-11"	A	3'-7"	A	18	20	21	23	6'-9"	C	22	22	24	25	4'-1"	B	18	20	21	23
	9.5	3'-9"	A	3'-5"	A	18	20	22	23	6'-5"	C	22	22	23	25	3'-10"	B	18	20	22	23
	10	3'-6"	A	3'-3"	A	18	20	22	23	6'-2"	C	22	22	23	25	3'-8"	B	18	20	22	23
	11	3'-2"	A	3'-0"	A	18	21	22	24	5'-8"	C	22	22	23	24	3'-5"	B	19	21	22	24
90 MPH EXPOSURE B																					
25	3	9'-7"	A	9'-0"	A	14	21	23	24	15'-3"	C	17	24	25	27	9'-8"	B	15	21	22	23
	3.5	8'-2"	A	7'-11"	A	15	21	22	23	13'-8"	C	17	23	25	26	8'-8"	B	15	20	22	23
	4	7'-2"	A	7'-1"	A	15	20	22	23	12'-5"	C	18	23	24	25	7'-9"	B	15	20	21	22
	4.5	6'-4"	A	6'-5"	B	15	20	21	22	11'-4"	C	18	22	24	25	7'-1"	B	15	19	21	22
	5	5'-9"	A	5'-11"	B	15	19	21	22	10'-6"	C	18	22	23	25	6'-6"	B	15	19	20	22
	5.5	5'-2"	A	5'-5"	B	15	19	20	22	9'-9"	C	18	22	23	24	6'-0"	B	15	19	20	21
	6	4'-9"	A	5'-0"	B	15	19	20	21	9'-1"	C	18	21	23	24	5'-7"	B	16	19	20	21
	6.5	4'-5"	A	4'-8"	B	15	19	20	21	8'-6"	C	18	21	22	24	5'-2"	B	16	18	20	21
	7	4'-1"	A	4'-4"	B	15	18	20	21	8'-0"	C	18	21	22	23	4'-10"	B	16	18	19	21
	7.5	3'-10"	A	4'-1"	B	15	18	19	21	7'-7"	C	18	20	22	23	4'-7"	B	16	18	19	20
	8	3'-7"	A	3'-10"	B	15	18	19	20	7'-2"	C	19	20	22	23	4'-4"	B	16	18	19	20
	8.5	3'-4"	A	3'-8"	B	15	18	19	20	6'-10"	C	19	20	21	23	4'-1"	B	16	18	19	20
	9	3'-2"	A	3'-5"	B	15	18	19	21	6'-6"	C	19	20	21	22	3'-11"	B	16	18	19	21
	9.5	3'-0"	A	3'-3"	B	15	18	20	21	6'-2"	C	19	20	21	22	3'-8"	B	16	18	20	21
90 MPH EXPOSURE C																					
25	3	9'-7"	A	9'-0"	A	17	24	25	26	15'-3"	C	20	26	28	29	9'-8"	B	17	23	24	26
	3.5	8'-2"	A	7'-11"	A	17	23	24	26	13'-8"	C	20	26	27	29	8'-8"	B	17	22	24	25
	4	7'-2"	A	7'-1"	A	17	22	24	25	12'-5"	C	20	25	27	28	7'-9"	B	17	22	23	25
	4.5	6'-4"	A	6'-5"	B	17	22	23	25	11'-4"	C	21	25	26	28	7'-1"	B	18	22	23	24
	5	5'-9"	A	5'-11"	B	17	22	23	24	10'-6"	C	21	24	26	27	6'-6"	B	18	21	23	24
	5.5	5'-2"	A	5'-5"	B	17	21	23	24	9'-9"	C	21	24	25	27	6'-0"	B	18	21	22	24
	6	4'-9"	A	5'-0"	B	17	21	22	24	9'-1"	C	21	24	25	26	5'-7"	B	18	21	22	23
	6.5	4'-5"	A	4'-8"	B	17	21	22	23	8'-6"	C	21	23	25	26	5'-2"	B	18	20	22	23
	7	4'-1"	A	4'-4"	B	17	20	22	23	8'-0"	C	21	23	24	26	4'-10"	B	18	20	21	23
	7.5	3'-10"	A	4'-1"	B	17	20	22	23	7'-7"	C	21	23	24	25	4'-7"	B	18	20	21	23
	8	3'-7"	A	3'-10"	B	17	20	21	23	7'-2"	C	21	22	24	25	4'-4"	B	18	20	21	22
	8.5	3'-4"	A	3'-8"	B	17	20	21	23	6'-10"	C	21	22	24	25	4'-1"	B	18	20	21	23
	9	3'-2"	A	3'-5"	B	17	20	21	23	6'-6"	C	21	22	23	25	3'-11"	B	18	20	21	23
	9.5	3'-0"	A	3'-3"	B	17	20	22	23	6'-2"	C	22	22	23	25	3'-8"	B	18	20	22	23
	10	2'-10"	A	3'-1"	B	17	20	22	23	5'-11"	C	22	22	23	24	3'-6"	B	18	20	22	23

TABLE 2.1

GROUND SNOW LOAD (PSF)	TRIB WIDTH (FT)	MAX POST SPACING ON SLAB (FT)	POST REQ'D FOR SLAB	0.042"x3"x8" Box Beam (Detail L1) MAX POST SPACING (FT)	Attached Structure MIN POST TYPE	Attached Structure FOOTER SIZE "d" (in)	Freestanding or Multispan Units MAX POST LENGTH 8' CONSTRAINED FOOTER "d" (in)	10' CONSTRAINED FOOTER "d" (in)	12' CONSTRAINED FOOTER "d" (in)	Double 0.042"x3"x8" Box Beam (Detail L12) MAX POST SPACING (FT)	Attached Structure MIN POST TYPE	Attached Structure FOOTER SIZE "d" (in)	Freestanding or Multispan Units MAX POST LENGTH 8' CONSTRAINED FOOTER "d" (in)	10' CONSTRAINED FOOTER "d" (in)	12' CONSTRAINED FOOTER "d" (in)	Double 0.032"x2"x6.625" Box Beam (Detail	Attached Structure MIN POST TYPE	Attached Structure FOOTER SIZE "d" (in)	Freestanding or Multispan Units MAX POST LENGTH 8' CONSTRAINED FOOTER "d" (in)	10' CONSTRAINED FOOTER "d" (in)	12' CONSTRAINED FOOTER "d" (in)
90 MPH EXPOSURE B																					
60	3	4'-1"	A	4'-4"	B	11	18	20	21	8'-0"	C	14	21	22	23	4'-11"	B	12	18	19	21
	3.5	3'-6"	A	3'-9"	B	11	18	19	20	7'-1"	C	14	20	22	23	4'-3"	B	12	18	19	20
	4	3'-0"	A	3'-4"	B	11	18	19	20	6'-3"	C	14	20	21	22	3'-9"	B	12	17	19	20
	4.5	2'-8"	A	3'-0"	B	11	17	18	20	5'-8"	C	14	19	21	22	3'-5"	B	12	17	18	19
	5	2'-5"	A	2'-8"	B	12	17	18	19	5'-2"	C	14	19	20	21	3'-1"	B	12	17	18	19
	5.5	2'-2"	A	2'-6"	B	12	17	18	19	4'-9"	C	14	19	20	21	2'-10"	B	12	17	18	19
	6	2'-0"	A	2'-3"	B	12	17	18	19	4'-5"	C	14	18	20	21	2'-7"	B	12	17	18	19
	6.5	1'-10"	A	2'-1"	B	12	17	18	20	4'-1"	C	14	18	19	21	2'-5"	B	12	17	18	20
	7	1'-9"	A	1'-11"	B	12	17	19	20	3'-10"	C	14	18	19	20	2'-3"	B	12	17	19	20
	7.5	1'-7"	A	1'-10"	B	12	18	19	20	3'-7"	C	14	18	19	20	2'-1"	B	12	18	19	20
	8	1'-6"	A	1'-8"	B	12	18	19	20	3'-4"	C	14	18	19	20	2'-0"	B	12	18	19	20
	8.5	1'-5"	A	1'-7"	B	12	18	19	20	3'-2"	C	14	18	19	20	1'-10"	B	12	18	19	20
90 MPH EXPOSURE C																					
60	3	4'-1"	A	4'-4"	B	13	20	22	23	8'-0"	C	16	23	24	26	4'-11"	B	14	20	22	23
	3.5	3'-6"	A	3'-9"	B	13	20	21	23	7'-1"	C	16	22	24	25	4'-3"	B	14	20	21	22
	4	3'-0"	A	3'-4"	B	13	19	21	22	6'-3"	C	16	22	23	25	3'-9"	B	14	19	21	22
	4.5	2'-8"	A	3'-0"	B	13	19	20	22	5'-8"	C	16	21	23	24	3'-5"	B	14	19	20	22
	5	2'-5"	A	2'-8"	B	13	19	20	21	5'-2"	C	16	21	22	24	3'-1"	B	14	19	20	21
	5.5	2'-2"	A	2'-6"	B	13	18	20	21	4'-9"	C	16	21	22	23	2'-10"	B	14	18	20	21
	6	2'-0"	A	2'-3"	B	13	19	20	21	4'-5"	C	16	20	22	23	2'-7"	B	14	19	20	21
	6.5	1'-10"	A	2'-1"	B	13	19	20	22	4'-1"	C	17	20	22	23	2'-5"	B	14	19	20	22
	7	1'-9"	A	1'-11"	B	13	19	21	22	3'-10"	C	17	20	21	23	2'-3"	B	14	19	21	22

TABLE 2.2 TRIBUTARY WIDTHS FOR SINGLE SPAN ATTACHED STRUCTURES

OVER-HANG (FT)	PROJECTION OF SINGLE SPAN STUCTURES (FT) 8'	9'	10'	11'	12'	13'	14'	15'	16'	17'	18'	19'	20'	21'	22'
0'	4'	4.5'	5'	5.5'	6'	6.5'	7'	7.5'	8'	8.5'	9'	9.5'	10'	10.5'	11'
1'	4.5'	5'	5.5'	6'	6.5'	7'	7.5'	8'	8.5'	9'	9.5'	10'	10.5'	11'	11.5'
2'	5'	5.5'	6'	6.5'	7'	7.5'	8'	8.5'	9'	9.5'	10'	10.5'	11'	11.5'	12'
3'	5.5'	6'	6.5'	7'	7.5'	8'	8.5'	9'	9.5'	10'	10.5'	11'	11.5'	12'	12.5'
4'	6'	6.5'	7'	7.5'	8'	8.5'	9'	9.5'	10'	10.5'	11'	11.5'	12'	12.5'	13'
5'	6.5'	7'	7.5'	8'	8.5'	9'	9.5'	10'	10.5'	11'	11.5'	12'	12.5'	13'	13.5'

TABLE 2.3 Post Requirements for Attached Structures

Post Description	Max Hgt	POST
Twin 0.062"x1.5"x1.5" ScrolL	9'	**A**
0.042"x3"x8" Aluminum Post	11'	**B**
0.024"Post with Sideplates	12'	**B**
Clover 0.032"x3"x3" Alum	12'	**B**
Clover 0.040"x3"x3" Alum	12'	**B**
Colonial 0.062" Extruded	12'	**C**
0.041"x3"x3" Steel Clover	12'	**D**
0.041"x3"x3" Steel Clover	8'	**E**
3/16"x3"x3" Steel Square	15'	**F**
3/16"x4"x4" Steel Square	18'	**G**
5/16"x4"x4" Steel Square	18'	**H**

TABLE 2.4 Post Requirements for Freestanding Structures

Post Description	Maximum Footing	Max Height	POST
0.041"x3"x3" Steel Clover	d = 23"	12'	**D**
0.041"x3"x3" Steel Clover	d = 23"	8'	**E**
3/16"x3"x3" Steel Square	d = 32"	15'	**F**
3/16"x4"x4" Steel Square	d = 38"	18'	**G**
5/16"x4"x4" Steel Square	d = 42"	18'	**H**

GENERAL INSTRUCTIONS FOR THESE TABLES

1. CHOOSE FREESTANDING OR ATTACHED STRUCTURE
2. CHOOSE PROJECTION, WIDTH AND OVERHANG OF UNIT
3. DETERMINE WIND AND LIVE OR SNOW LOAD OF STRUCTURE SITE (PATIO UNITS USE 10 PSF MIN, COMMERCIAL UNITS USE 20PSF MIN)
4. CHOOSE A RAFTER FROM **TABLES 1.1** TO **1.8** THAT HAS ADEQUATE CLEARSPAN FOR YOUR NEEDS.
5. DETERMINE TRIBUTARY WIDTH FROM TABLE 2.2 OR CALCULATE FROM TRIBUTARY DIAGRAM ON**SC02 PAGE 2 OF 2**
6. CHOOSE A HEADER FROM TABLE 2.1 THAT HAS ADEQUATE POST SPACING.
7. USE THE APPROPRIATE FOOTER SIZE SHOWN.
8. FOR SINGLE SPAN ATTACHED UNIT USE THE POST SHOWN UPGRADE THE POST IF THE HEIGHT IS NOT SUFFICIENT FREESTANDING AND MULTISPAN UNITS USE TABLE 2.4
9. FIND THE O/C SPACING OR # OF FASTENERS FOR ATTACHING TO WALL FROM TABLE 7.6
10. USE THE APPROPRIATE DETAILS
11. ALL LATTICE **NOT** USING **DETAIL L29** MUST COMPLY WITH TABLES **L1** AND **L2** ON SHEET **M5**

FOR PATIO SLABS FOLLOW 1-6 FROM ABOVE THEN

SLAB 7. DETERMINE MAXIMUM POST SPACING ON SLAB FROM TABLE 2.1
SLAB 8. USE THE SMALLER OF THE POST SPACING ON SLAB OR HEADER POST SPACING
SLAB 9. FOLLOW **9-11** FROM ABOVE
SLAB 10. FOR **TWO** POST STRUCTURES USE **TABLE 7.1** ON SHEET **M3** FOR SLAB REQUIREMENTS INSTEAD OF THESE TABLES
SLAB11. CHECK TABLES **SLAB1** AND **SLAB2** ON **M5** FOR CORNER DISTANCE REQUIRMENTS.

Amerimax Building Products
5208 Tennyson Parkway
Plano, Texas 75024

Carl Putnam, P. E.
3441 Ivylink Place
Lynchburg, VA 24503
carlputnam@comcast.net

REGISTERED PROFESSIONAL ENGINEER
CARL PUTNAM
C 68139
EXP. 6/30/2009
CIVIL
STATE OF CALIFORNIA

4/27/2009

LATTICE COVER 2.0 POST SPACINGS FOR PATIO AND COMMERCIAL COVERS 90 MPH WIND AREAS

TABLE 2.5

GROUND SNOW LOAD (PSF)	TRIB WIDTH (FT)	MAX POST SPACING ON SLAB (FT)	POST REQ'D FOR SLAB	12 Ga 3"x8" Steel C Beam (Detail L18) MAX POST SPACING (FT)	Attached Structure MIN POST TYPE	Attached Structure FOOTER SIZE "d" (in)	Freestanding or Multispan Units MAX POST LENGTH CONSTRAINED FOOTER 8' "d" (in)	12' "d" (in)	18' "d" (in)	16 Ga 3"x8" Steel C Beam (Detail L18) MAX POST SPACING (FT)	Attached Structure MIN POST TYPE	Attached Structure FOOTER SIZE "d" (in)	Freestanding or Multispan Units MAX POST LENGTH CONSTRAINED FOOTER 8' "d" (in)	12' "d" (in)	18' "d" (in)	Double 12 Ga 3"x8" Steel C Beam (Detail L8) MAX POST SPACING (FT)	Attached Structure MIN POST TYPE	Attached Structure FOOTER SIZE "d" (in)	Freestanding or Multispan Units MAX POST LENGTH CONSTRAINED FOOTER 8' "d" (in)	12' "d" (in)	18' "d" (in)
90 MPH EXPOSURE B																					
10 LIVE	3	22'-8"	A	30'-0"	B	22	28	31		27'-0"	B	21	27	30		30'-0"	B	22	28	31	
	3.5	19'-5"	A	30'-0"	C	23	28	31		24'-6"	B	21	27	29		30'-0"	C	23	28	31	
	4	17'-0"	A	30'-0"	C	24	28	31		22'-5"	B	22	26	29		30'-0"	C	24	28	31	
	4.5	15'-1"	A	29'-7"	C	25	28	31		20'-9"	C	22	26	28		30'-0"	C	25	28	31	
	5	13'-7"	A	28'-6"	C	25	27	31		19'-4"	C	22	25	28		30'-0"	C	26	28	31	
	5.5	12'-4"	A	27'-8"	C	26	27	30		18'-1"	C	22	25	28		30'-0"	D	26	28	31	
	6	11'-4"	A	26'-10"	C	26	27	30		17'-0"	C	22	24	27		30'-0"	D	27	28	31	
	6.5	10'-5"	A	26'-2"	D	27	27	30		16'-0"	C	23	24	27		30'-0"	D	28	28	31	
	7	9'-8"	A	25'-6"	D	27	27	30		15'-2"	C	23	24	27		30'-0"	D	29	29	31	
	7.5	9'-1"	A	24'-11"	D	28	28	30		14'-5"	C	23	24	26		30'-0"	D	29	29	31	
	8	8'-6"	A	24'-5"	D	28	28	29		13'-9"	C	23	23	26		30'-0"	D	30	30	31	
	8.5	8'-0"	A	23'-9"	D	28	28	29		13'-2"	C	23	23	26		30'-0"	D	30	30	31	
	9	7'-6"	A	22'-11"	D	28	28	29		12'-7"	C	23	23	26		29'-7"	D	31	31	31	
	9.5	7'-2"	A	22'-2"	D	29	29	29		12'-1"	C	23	23	25		29'-0"	D	31	31	31	
	10	6'-9"	A	21'-5"	D	29	29	29		11'-8"	C	24	24	25		28'-6"	D	32	32	32	
	11	6'-2"	A	20'-2"	D	29	29	29		10'-10"	C	24	24	25		27'-8"	D	32	32	32	
	12	5'-8"	A	19'-1"	D	29	29	29		10'-0"	C	24	24	24		26'-10"	D	33	33	33	
	13	5'-2"	A	18'-1"	D	30	30	30		9'-3"	C	24	24	24		26'-2"	E	34	34	34	
90 MPH EXPOSURE C																					
10 LIVE	3	22'-8"	A	30'-0"	B	25	31	34		27'-0"	B	24	30	33		30'-0"	B	25	31	34	
	3.5	19'-5"	A	30'-0"	C	26	31	34		24'-6"	B	24	29	33		30'-0"	C	26	31	34	
	4	17'-0"	A	30'-0"	C	27	31	34		22'-5"	B	25	29	32		30'-0"	C	27	31	34	
	4.5	15'-1"	A	29'-7"	C	28	31	34		20'-9"	C	25	28	31		30'-0"	C	28	31	34	
	5	13'-7"	A	28'-6"	C	29	30	34		19'-4"	C	25	28	31		30'-0"	C	29	31	34	
	5.5	12'-4"	A	27'-8"	C	30	30	34		18'-1"	C	26	27	31		30'-0"	D	30	31	34	
	6	11'-4"	A	26'-10"	C	30	30	33		17'-0"	C	26	27	30		30'-0"	D	31	31	34	
	6.5	10'-5"	A	26'-2"	D	31	31	33		16'-0"	C	26	27	30		30'-0"	D	32	32	34	
	7	9'-8"	A	25'-6"	D	31	31	33		15'-2"	C	26	26	29		30'-0"	D	33	33	34	
	7.5	9'-1"	A	24'-11"	D	32	32	33		14'-5"	C	26	26	29		30'-0"	D	34	34	34	
	8	8'-6"	A	24'-5"	D	32	32	33		13'-9"	C	27	27	29		30'-0"	D	34	34	34	
	8.5	8'-0"	A	23'-9"	D	32	32	32		13'-2"	C	27	27	29		30'-0"	D	35	35	35	
	9	7'-6"	A	22'-11"	D	33	33	33		12'-7"	C	27	27	28		29'-7"	D	36	36	36	
	9.5	7'-2"	A	22'-2"	D	33	33	33		12'-1"	C	27	27	28		29'-0"	D	36	36	36	
	10	6'-9"	A	21'-5"	D	33	33	33		11'-8"	C	27	27	28		28'-6"	D	36	36	36	
	11	6'-2"	A	20'-2"	D	34	34	34		10'-10"	C	27	27	27		27'-8"	D	37	37	37	
	12	5'-8"	A	19'-1"	D	34	34	34		10'-0"	C	27	27	27		26'-10"	D	38	38	38	
	13	5'-2"	A	18'-1"	D	34	34	34		9'-3"	C	27	27	27		26'-2"	E	39	39	39	
90 MPH EXPOSURE B																					
20 LIVE	3	11'-10"	A	26'-10"	C	21	27	30	34	17'-8"	C	18	25	27	31	30'-0"	D	22	28	31	35
	3.5	10'-2"	A	25'-6"	D	21	27	30	33	15'-10"	C	18	24	27	30	30'-0"	D	23	28	31	35
	4	8'-11"	A	24'-5"	D	22	27	29	33	14'-4"	C	19	23	26	30	30'-0"	D	24	28	31	35
	4.5	7'-11"	A	23'-5"	D	23	26	29	33	13'-2"	C	19	23	26	29	29'-7"	D	25	28	31	35
	5	7'-1"	A	22'-2"	D	23	26	29	33	12'-2"	C	19	23	25	29	28'-6"	D	25	27	31	34
	5.5	6'-5"	A	20'-11"	D	23	26	28	32	11'-3"	C	19	22	25	28	27'-8"	D	26	27	30	34
	6	5'-11"	A	19'-9"	D	24	25	28	32	10'-7"	C	19	22	25	28	26'-10"	D	26	27	30	34
	6.5	5'-5"	A	18'-9"	D	24	25	28	31	9'-9"	C	19	22	24	28	26'-2"	D	27	27	30	34
	7	5'-1"	A	17'-10"	D	24	25	27	31	9'-1"	C	19	21	24	27	25'-6"	E	27	27	30	33
	7.5	4'-9"	A	17'-1"	D	24	24	27	31	8'-6"	C	19	21	24	27	24'-11"	E	28	28	30	33
	8	4'-5"	A	16'-4"	D	24	24	27	31	7'-11"	C	19	21	23	27	24'-5"	E	28	28	29	33
	8.5	4'-2"	A	15'-8"	D	25	25	27	30	7'-6"	C	19	20	23	27	23'-11"	E	28	28	29	33
	9	3'-11"	A	15'-1"	D	25	25	26	30	7'-1"	C	19	20	23	26	23'-5"	E	29	29	29	33
	9.5	3'-9"	A	14'-6"	D	25	25	26	30	6'-8"	C	19	20	22	26	23'-0"	E	29	29	29	33
	10	3'-6"	A	14'-0"	D	25	25	26	30	6'-4"	C	19	20	22	26	22'-6"	E	29	29	29	33
	11	3'-2"	A	13'-2"	D	25	25	26	29	5'-10"	C	19	19	22	26	20'-7"	E	29	29	29	32
	12	2'-11"	A	12'-4"	D	25	25	25	29	5'-4"	C	19	19	22	25	18'-11"	E	29	29	29	31
	13	2'-8"	A	11'-8"	D	26	26	26	29	4'-11"	C	19	19	22	26	17'-6"	E	29	29	29	31

TABLE 2.5

GROUND SNOW LOAD (PSF)	TRIB WIDTH (FT)	MAX POST SPACING ON SLAB (FT)	POST REQ'D FOR SLAB	12 Ga 3"x8" Steel C Beam (Detail L18) MAX POST SPACING (FT)	Attached Structure MIN POST TYPE	Attached Structure FOOTER SIZE "d" (in)	Freestanding or Multispan Units MAX POST LENGTH CONSTRAINED FOOTER 8' "d" (in)	12' "d" (in)	18' "d" (in)	16 Ga 3"x8" Steel C Beam (Detail L18) MAX POST SPACING (FT)	Attached Structure MIN POST TYPE	Attached Structure FOOTER SIZE "d" (in)	Freestanding or Multispan Units MAX POST LENGTH CONSTRAINED FOOTER 8' "d" (in)	12' "d" (in)	18' "d" (in)	Double 12 Ga 3"x8" Steel C Beam (Detail L8) MAX POST SPACING (FT)	Attached Structure MIN POST TYPE	Attached Structure FOOTER SIZE "d" (in)	Freestanding or Multispan Units MAX POST LENGTH CONSTRAINED FOOTER 8' "d" (in)	12' "d" (in)	18' "d" (in)
90 MPH EXPOSURE B																					
30	3	8'-0"	A	24'-10"	D	20	27	30	33	15'-1"	C	17	24	26	30	30'-0"	D	22	28	31	35
	3.5	6'-10"	A	23'-7"	D	21	26	29	33	13'-6"	C	17	23	26	29	29'-9"	D	23	28	31	35
	4	6'-0"	A	22'-3"	D	21	26	29	33	12'-2"	C	18	23	25	29	28'-5"	D	23	27	31	34
	4.5	5'-4"	A	20'-8"	D	22	26	28	32	11'-1"	C	18	22	25	28	27'-4"	E	24	27	30	34
	5	4'-10"	A	19'-4"	D	22	25	28	32	10'-2"	C	18	22	24	28	26'-5"	E	24	27	30	34
	5.5	4'-4"	A	18'-2"	D	22	25	28	31	9'-3"	C	18	21	24	28	25'-7"	E	25	27	30	33
	6	4'-0"	A	17'-1"	D	23	24	27	31	8'-6"	C	18	21	24	27	24'-10"	E	26	27	30	33
	6.5	3'-8"	A	16'-3"	D	23	24	27	31	7'-10"	C	18	21	23	27	24'-2"	E	26	26	29	33
	7	3'-5"	A	15'-5"	D	23	24	27	30	7'-4"	C	18	20	23	26	23'-7"	E	26	26	29	33
	7.5	3'-2"	A	14'-9"	D	23	24	26	30	6'-10"	C	18	20	23	26	23'-1"	E	27	27	29	33
	8	3'-0"	A	14'-1"	D	23	23	26	30	6'-5"	C	18	20	22	26	22'-7"	E	27	27	29	33
	8.5	2'-10"	A	13'-6"	D	23	23	26	29	6'-0"	C	18	20	22	26	21'-4"	E	27	27	29	32
	9	2'-8"	A	12'-11"	E	24	24	26	29	5'-8"	C	18	19	22	26	20'-2"	E	27	27	28	32
	9.5	2'-6"	A	12'-6"	E	24	24	25	29	5'-5"	C	18	19	22	25	19'-2"	E	27	27	28	32
90 MPH EXPOSURE C																					
30	3	8'-0"	A	24'-10"	D	23	30	33	37	15'-1"	C	20	26	29	33	30'-0"	D	25	31	34	38
	3.5	6'-10"	A	23'-7"	D	24	29	32	37	13'-6"	C	20	26	29	33	29'-9"	D	26	31	34	38
	4	6'-0"	A	22'-3"	D	25	29	32	36	12'-2"	C	20	25	28	32	28'-5"	D	27	30	34	38
	4.5	5'-4"	A	20'-8"	D	25	28	31	36	11'-1"	C	20	25	28	32	27'-4"	E	28	30	34	38
	5	4'-10"	A	19'-4"	D	25	28	31	35	10'-2"	C	21	24	27	31	26'-5"	E	28	30	33	37
	5.5	4'-4"	A	18'-2"	D	26	27	31	35	9'-3"	C	21	24	27	31	25'-7"	E	29	30	33	37
	6	4'-0"	A	17'-1"	D	26	27	30	34	8'-6"	C	21	23	26	30	24'-10"	E	29	30	33	37
	6.5	3'-8"	A	16'-3"	D	26	27	30	34	7'-10"	C	21	23	26	30	24'-2"	E	30	30	33	37
	7	3'-5"	A	15'-5"	D	26	26	30	34	7'-4"	C	21	23	25	29	23'-7"	E	30	30	32	37
	7.5	3'-2"	A	14'-9"	D	27	27	29	33	6'-10"	C	21	22	25	29	23'-1"	E	31	31	32	36
	8	3'-0"	A	14'-1"	D	27	27	29	33	6'-5"	C	21	22	25	29	22'-7"	E	31	31	32	36
	8.5	2'-10"	A	13'-6"	D	27	27	29	33	6'-0"	C	21	22	24	29	21'-4"	E	31	31	32	36
	9	2'-8"	A	12'-11"	E	27	27	28	32	5'-8"	C	21	21	24	28	20'-2"	E	31	31	31	35
	9.5	2'-6"	A	12'-6"	E	27	27	28	32	5'-5"	C	21	21	24	28	19'-2"	E	31	31	31	35
90 MPH EXPOSURE C																					
40	3	6'-1"	A	22'-5"	D	22	29	32	36	12'-3"	C	18	25	28	32	28'-5"	D	24	30	34	38
	3.5	5'-2"	A	20'-4"	D	23	28	31	35	10'-11"	C	19	25	27	31	27'-0"	E	25	30	33	38
	4	4'-6"	A	18'-8"	D	23	28	31	35	9'-8"	C	19	24	27	31	25'-10"	E	26	30	33	37
	4.5	4'-0"	A	17'-3"	D	24	27	30	34	8'-7"	C	19	23	26	30	24'-10"	E	27	30	33	37
	5	3'-7"	A	16'-1"	D	24	27	30	34	7'-9"	C	19	23	26	30	24'-0"	E	27	29	33	37
	5.5	3'-3"	A	15'-1"	D	24	26	29	33	7'-1"	C	19	22	25	29	23'-3"	E	28	29	32	36
	6	3'-0"	A	14'-2"	D	24	26	29	33	6'-6"	C	19	22	25	29	22'-7"	E	28	29	32	36
	6.5	2'-9"	A	13'-5"	D	25	26	29	33	6'-0"	C	19	22	24	28	21'-2"	E	29	29	32	36
	7	2'-7"	A	12'-9"	E	25	25	28	32	5'-7"	C	19	21	24	28	19'-8"	E	29	29	31	35
	7.5	2'-5"	A	12'-1"	E	25	25	28	32	5'-2"	C	19	21	24	28	18'-5"	E	29	29	31	35
	8	2'-3"	A	11'-7"	E	25	25	28	32	4'-10"	C	19	21	24	28	17'-4"	E	29	29	30	34
	8.5	2'-1"	A	11'-1"	E	25	25	28	31	4'-7"	C	19	21	23	27	16'-4"	E	29	29	30	34
	9	2'-0"	A	10'-7"	E	25	25	27	31	4'-4"	C	19	20	23	27	15'-5"	E	29	29	30	34
90 MPH EXPOSURE B																					
40	3	6'-1"	A	22'-5"	D	20	26	29	33	12'-3"	C	16	23	25	29						
	3.5	5'-2"	A	20'-4"	D	20	25	28	32	10'-11"	C	16	22	25	28						
	4	4'-6"	A	18'-8"	D	20	25	28	31	9'-8"	C	16	22	24	28						
	4.5	4'-0"	A	17'-3"	D	21	24	27	31	8'-7"	C	16	21	24	27						
	5	3'-7"	A	16'-1"	D	21	24	27	30	7'-9"	C	16	21	23	27						
	5.5	3'-3"	A	15'-1"	D	21	24	26	30	7'-1"	C	16	20	23	26						
	6	3'-0"	A	14'-2"	D	21	23	26	30	6'-6"	C	16	20	22	26						
	6.5	2'-9"	A	13'-5"	D	21	23	26	29	6'-0"	C	16	20	22	26						
	7	2'-7"	A	12'-9"	E	21	23	26	29	5'-7"	C	16	19	22	25						
	7.5	2'-5"	A	12'-1"	E	22	23	25	29	5'-2"	C	16	19	21	25						
	8	2'-3"	A	11'-7"	E	22	22	25	29	4'-10"	C	16	19	21	25						
	8.5	2'-1"	A	11'-1"	E	22	22	25	28	4'-7"	C	16	19	21	25						
	9	2'-0"	A	10'-7"	E	22	22	25	28	4'-4"	C	16	18	21	25						

4/27/2009

LATTICE COVER 2.0 POST SPACINGS FOR PATIO AND COMMERCIAL COVERS 90 MPH WIND AREAS

TABLE 2.5

GROUND SNOW LOAD (PSF)	TRIB WIDTH (FT)	MAX POST SPACING ON SLAB (FT)	POST REQ'D FOR SLAB	12 Ga 3"x8" Steel C Beam (Detail L18) MAX POST SPACING (FT)	Attached Structure MIN POST TYPE	Attached Structure FOOTER SIZE "d" (in)	Freestanding or Multispan Units MAX POST LENGTH 8' CONSTRAINED FOOTER "d" (in)	12' CONSTRAINED FOOTER "d" (in)	18' CONSTRAINED FOOTER "d" (in)	16 Ga 3"x8" Steel C Beam (Detail L18) MAX POST SPACING (FT)	Attached Structure MIN POST TYPE	Attached Structure FOOTER SIZE "d" (in)	Freestanding or Multispan Units MAX POST LENGTH 8' CONSTRAINED FOOTER "d" (in)	12' CONSTRAINED FOOTER "d" (in)	18' CONSTRAINED FOOTER "d" (in)	Double 12 Ga 3"x8" Steel C Beam (Detail L8) MAX POST SPACING (FT)	Attached Structure MIN POST TYPE	Attached Structure FOOTER SIZE "d" (in)	Freestanding or Multispan Units MAX POST LENGTH 8' CONSTRAINED FOOTER "d" (in)	12' CONSTRAINED FOOTER "d" (in)	18' CONSTRAINED FOOTER "d" (in)
90 MPH EXPOSURE C																					
20 LIVE	3	11'-10"	A	26'-10"	C	24	30	33	38	17'-8"	C	21	27	30	34	30'-0"	D	25	31	34	38
	3.5	10'-2"	A	25'-6"	D	25	30	33	37	15'-10"	C	21	27	30	34	30'-0"	D	26	31	34	38
	4	8'-11"	A	24'-5"	D	25	29	33	37	14'-4"	C	21	26	29	33	30'-0"	D	27	31	34	38
	4.5	7'-11"	A	23'-5"	D	26	29	32	36	13'-2"	C	22	26	29	32	29'-7"	D	28	31	34	38
	5	7'-1"	A	22'-2"	D	27	29	32	36	12'-2"	C	22	25	28	32	28'-6"	D	29	30	34	38
	5.5	6'-5"	A	20'-11"	D	27	28	32	36	11'-3"	C	22	25	28	32	27'-8"	D	30	30	34	38
	6	5'-11"	A	19'-9"	D	27	28	31	35	10'-7"	C	22	24	27	31	26'-10"	D	30	30	33	38
	6.5	5'-5"	A	18'-9"	D	27	28	31	35	9'-9"	C	22	24	27	31	26'-2"	D	31	31	33	37
	7	5'-1"	A	17'-10"	D	28	28	30	34	9'-1"	C	22	24	26	30	25'-6"	E	31	31	33	37
	7.5	4'-9"	A	17'-1"	D	28	28	30	34	8'-6"	C	22	23	26	30	24'-11"	E	32	32	33	37
	8	4'-5"	A	16'-4"	D	28	28	30	34	7'-11"	C	22	23	26	30	24'-5"	E	32	32	33	37
	8.5	4'-2"	A	15'-8"	D	28	28	30	34	7'-6"	C	22	23	25	29	23'-11"	E	33	33	33	37
	9	3'-11"	A	15'-1"	D	28	28	29	33	7'-1"	C	22	22	25	29	23'-5"	E	33	33	33	36
	9.5	3'-9"	A	14'-6"	D	29	29	29	33	6'-8"	C	22	22	25	29	23'-0"	E	33	33	33	36
	10	3'-6"	A	14'-0"	D	29	29	29	33	6'-4"	C	22	22	25	29	22'-6"	E	34	34	34	36
	11	3'-2"	A	13'-2"	D	29	29	29	32	5'-10"	C	22	22	24	28	20'-7"	E	34	34	34	35
90 MPH EXPOSURE B																					
25	3	9'-7"	A	26'-5"	D	21	27	30	34	17'-1"	C	18	24	27	31	30'-0"	D	22	28	31	35
	3.5	8'-2"	A	25'-1"	D	21	27	30	33	15'-4"	C	18	24	27	30	30'-0"	D	23	28	31	35
	4	7'-2"	A	24'-0"	D	22	26	29	33	13'-10"	C	18	23	26	30	30'-0"	D	24	28	31	35
	4.5	6'-4"	A	23'-0"	D	23	26	29	33	12'-8"	C	19	23	26	29	29'-1"	D	24	28	31	34
	5	5'-9"	A	21'-7"	D	23	26	29	32	11'-9"	C	19	22	25	29	28'-1"	E	25	27	30	34
	5.5	5'-2"	A	20'-3"	D	23	25	28	32	10'-11"	C	19	22	25	28	27'-2"	E	26	27	30	34
	6	4'-9"	A	19'-2"	D	23	25	28	32	10'-1"	C	19	22	24	28	26'-5"	E	26	27	30	34
	6.5	4'-5"	A	18'-2"	D	24	25	28	31	9'-4"	C	19	21	24	28	25'-9"	E	26	27	30	34
	7	4'-1"	A	17'-4"	D	24	25	27	31	8'-8"	C	19	21	24	27	25'-1"	E	27	27	30	33
	7.5	3'-10"	A	16'-7"	D	24	24	27	31	8'-1"	C	19	21	23	27	24'-6"	E	27	27	30	33
	8	3'-7"	A	15'-10"	D	24	24	27	30	7'-7"	C	19	20	23	27	24'-0"	E	28	28	29	33
	8.5	3'-4"	A	15'-2"	D	24	24	27	30	7'-2"	C	19	20	23	26	23'-6"	E	28	28	29	33
	9	3'-2"	A	14'-7"	D	24	24	26	30	6'-9"	C	19	20	23	26	23'-1"	E	28	28	29	33
	9.5	3'-0"	A	14'-1"	D	25	25	26	30	6'-5"	C	19	20	22	26	22'-7"	E	29	29	29	33
90 MPH EXPOSURE C																					
25	3	9'-7"	A	26'-5"	D	24	30	33	37	17'-1"	C	21	27	30	34	30'-0"	D	25	31	34	38
	3.5	8'-2"	A	25'-1"	D	25	30	33	37	15'-4"	C	21	26	29	33	30'-0"	D	26	31	34	38
	4	7'-2"	A	24'-0"	D	25	29	33	37	13'-10"	C	21	26	29	33	30'-0"	D	27	31	34	38
	4.5	6'-4"	A	23'-0"	D	26	29	32	36	12'-8"	C	21	25	28	32	29'-1"	D	28	31	34	38
	5	5'-9"	A	21'-7"	D	26	29	32	36	11'-9"	C	22	25	28	32	28'-1"	E	29	30	34	38
	5.5	5'-2"	A	20'-3"	D	27	28	31	35	10'-11"	C	22	24	27	31	27'-2"	E	29	30	33	38
	6	4'-9"	A	19'-2"	D	27	28	31	35	10'-1"	C	22	24	27	31	26'-5"	E	30	30	33	37
	6.5	4'-5"	A	18'-2"	D	27	27	31	35	9'-4"	C	22	24	27	31	25'-9"	E	30	30	33	37
	7	4'-1"	A	17'-4"	D	27	27	30	34	8'-8"	C	22	23	26	30	25'-1"	E	31	31	33	37
	7.5	3'-10"	A	16'-7"	D	28	28	30	34	8'-1"	C	22	23	26	30	24'-6"	E	31	31	33	37
	8	3'-7"	A	15'-10"	D	28	28	30	34	7'-7"	C	22	23	26	30	24'-0"	E	32	32	33	37
	8.5	3'-4"	A	15'-2"	D	28	28	29	33	7'-2"	C	22	22	25	29	23'-6"	E	32	32	32	36
	9	3'-2"	A	14'-7"	D	28	28	29	33	6'-9"	C	22	22	25	29	23'-1"	E	33	33	33	36
	9.5	3'-0"	A	14'-1"	D	28	28	29	33	6'-5"	C	22	22	25	29	22'-7"	E	33	33	33	36
	10	2'-10"	A	13'-7"	D	28	28	29	33	6'-1"	C	22	22	24	29	21'-6"	E	33	33	33	36

TABLE 2.5

GROUND SNOW LOAD (PSF)	TRIB WIDTH (FT)	MAX POST SPACING ON SLAB (FT)	POST REQ'D FOR SLAB	12 Ga 3"x8" Steel C Beam (Detail L18) MAX POST SPACING (FT)	Attached Structure MIN POST TYPE	Attached Structure FOOTER SIZE "d" (in)	Freestanding or Multispan Units MAX POST LENGTH 8' CONSTRAINED FOOTER "d" (in)	12' CONSTRAINED FOOTER "d" (in)	18' CONSTRAINED FOOTER "d" (in)	16 Ga 3"x8" Steel C Beam (Detail L18) MAX POST SPACING (FT)	Attached Structure MIN POST TYPE	Attached Structure FOOTER SIZE "d" (in)	Freestanding or Multispan Units MAX POST LENGTH 8' CONSTRAINED FOOTER "d" (in)	12' CONSTRAINED FOOTER "d" (in)	18' CONSTRAINED FOOTER "d" (in)	Double 12 Ga 3"x8" Steel C Beam (Detail L8) MAX POST SPACING (FT)	Attached Structure MIN POST TYPE	Attached Structure FOOTER SIZE "d" (in)	Freestanding or Multispan Units MAX POST LENGTH 8' CONSTRAINED FOOTER "d" (in)	12' CONSTRAINED FOOTER "d" (in)	18' CONSTRAINED FOOTER "d" (in)
90 MPH EXPOSURE B																					
60	3	4'-1"	A	17'-5"	D	18	25	27	31	8'-8"	C	14	21	24	27	24'-10"	E	20	27	30	33
	3.5	3'-6"	A	15'-8"	D	18	24	27	30	7'-6"	C	14	20	23	27	23'-7"	E	21	26	29	33
	4	3'-0"	A	14'-4"	D	19	23	26	30	6'-7"	C	14	20	22	26	22'-7"	E	22	26	29	33
	4.5	2'-8"	A	13'-2"	E	19	23	26	29	5'-10"	C	14	19	22	26	20'-8"	E	22	26	28	32
	5	2'-5"	A	12'-3"	E	19	23	25	29	5'-3"	C	14	19	22	25	18'-8"	E	22	25	28	31
	5.5	2'-2"	A	11'-5"	E	19	22	25	29	4'-9"	C	14	19	21	25	17'-0"	E	22	24	27	31
	6	2'-0"	A	10'-8"	E	19	22	25	28	4'-4"	C	14	18	21	25	15'-7"	E	22	24	27	30
	6.5	1'-10"	A	10'-1"	E	19	22	24	28	4'-0"	C	14	18	21	24	14'-5"	E	22	24	26	30
	7	1'-9"	A	9'-7"	E	20	21	24	28	3'-9"	C	14	18	20	24	13'-5"	E	22	23	26	29
	7.5	1'-7"	A	9'-1"	E	20	21	24	27	3'-6"	C	14	18	20	24	12'-7"	E	22	23	25	29
	8	1'-6"	A	8'-8"	E	20	21	24	27	3'-3"	C	14	18	20	24	11'-10"	E	22	22	25	29
	8.5	1'-5"	A	8'-3"	E	20	21	23	27	3'-1"	C	14	18	20	24	11'-1"	E	22	22	25	28
90 MPH EXPOSURE C																					
60	3	4'-1"	A	17'-5"	D	21	27	30	34	8'-8"	C	16	23	26	30	24'-10"	E	23	30	33	37
	3.5	3'-6"	A	15'-8"	D	21	27	30	34	7'-6"	C	16	23	25	29	23'-7"	E	24	29	32	37
	4	3'-0"	A	14'-4"	D	21	26	29	33	6'-7"	C	16	22	25	29	22'-7"	E	25	29	32	36
	4.5	2'-8"	A	13'-2"	E	22	26	29	33	5'-10"	C	16	22	24	28	20'-8"	E	25	28	31	36
	5	2'-5"	A	12'-3"	E	22	25	28	32	5'-3"	C	16	21	24	28	18'-8"	E	25	28	31	35
	5.5	2'-2"	A	11'-5"	E	22	25	28	32	4'-9"	C	16	21	23	28	17'-0"	E	25	27	30	34
	6	2'-0"	A	10'-8"	E	22	24	27	31	4'-4"	C	16	20	23	27	15'-7"	E	25	27	30	34
	6.5	1'-10"	A	10'-1"	E	22	24	27	31	4'-0"	C	16	20	23	27	14'-5"	E	25	26	29	33
	7	1'-9"	A	9'-7"	E	22	24	27	31	3'-9"	C	16	20	23	27	13'-5"	E	25	26	29	33

TABLE 2.2 TRIBUTARY WIDTHS FOR SINGLE SPAN ATTACHED STRUCTURES

OVER-HANG (FT)	PROJECTION OF SINGLE SPAN STUCTURES (FT) 8'	9'	10'	11'	12'	13'	14'	15'	16'	17'	18'	19'	20'	21'	22'
0'	4'	4.5'	5'	5.5'	6'	6.5'	7'	7.5'	8'	8.5'	9'	9.5'	10'	10.5'	11'
1'	4.5'	5'	5.5'	6'	6.5'	7'	7.5'	8'	8.5'	9'	9.5'	10'	10.5'	11'	11.5'
2'	5'	5.5'	6'	6.5'	7'	7.5'	8'	8.5'	9'	9.5'	10'	10.5'	11'	11.5'	12'
3'	5.5'	6'	6.5'	7'	7.5'	8'	8.5'	9'	9.5'	10'	10.5'	11'	11.5'	12'	12.5'
4'	6'	6.5'	7'	7.5'	8'	8.5'	9'	9.5'	10'	10.5'	11'	11.5'	12'	12.5'	13'
5'	6.5'	7'	7.5'	8'	8.5'	9'	9.5'	10'	10.5'	11'	11.5'	12'	12.5'	13'	13.5'

TABLE 2.3 Post Requirements for Attached Structures

Post Description	Max Hgt	POST
Twin 0.062"x1.5"x1.5" ScrolL	9'	A
0.042"x3"x8" Aluminum Post	11'	B
0.024"Post with Sideplates	12'	B
Clover 0.032"x3"x3" Alum	12'	B
Clover 0.040"x3"x3" Alum	12'	B
Colonial 0.062" Extruded	12'	C
0.041"x3"x3" Steel Clover	12'	D
0.041"x3"x3" Steel Clover	8'	E
3/16"x3"x3" Steel Square	15'	F
3/16"x4"x4" Steel Square	18'	G
5/16"x4"x4" Steel Square	18'	H

TABLE 2.4 Post Requirements for Freestanding Structures

Post Description	Maximum Footing	Max Height	POST
0.041"x3"x3" Steel Clover	d = 23"	12'	D
0.041"x3"x3" Steel Clover	d = 23"	8'	E
3/16"x3"x3" Steel Square	d = 32"	15'	F
3/16"x4"x4" Steel Square	d = 38"	18'	G
5/16"x4"x4" Steel Square	d = 42"	18'	H

GENERAL INSTRUCTIONS FOR THESE TABLES

1. CHOOSE FREESTANDING OR ATTACHED STRUCTURE
2. CHOOSE PROJECTION, WIDTH AND OVERHANG OF UNIT
3. DETERMINE WIND AND LIVE OR SNOW LOAD OF STRUCTURE SITE (PATIO UNITS USE 10 PSF MIN, COMMERCIAL UNITS USE 20PSF MIN)
4. CHOOSE A RAFTER FROM **TABLES 1.1** TO **1.8** THAT HAS ADEQUATE CLEARSPAN FOR YOUR NEEDS.
5. DETERMINE TRIBUTARY WIDTH FROM TABLE 2.2 OR CALCULATE FROM TRIBUTARY DIAGRAM ON**SC02 PAGE 2 OF 2**
6. CHOOSE A HEADER FROM TABLE 2.5 THAT HAS ADEQUATE POST SPACING.
7. USE THE APPROPRIATE FOOTER SIZE SHOWN.
8. FOR SINGLE SPAN ATTACHED UNIT USE THE POST SHOWN UPGRADE THE POST IF THE HEIGHT IS NOT SUFFICIENT FREESTANDING AND MULTISPAN UNITS USE TABLE 2.4
9. FIND THE O/C SPACING OR # OF FASTENERS FOR ATTACHING TO WALL FROM TABLE 7.6
10. USE THE APPROPRIATE DETAILS
11. ALL LATTICE **NOT** USING **DETAIL L29** MUST COMPLY WITH TABLES **L1** AND **L2** ON SHEET **M5**

FOR PATIO SLABS FOLLOW 1-6 FROM ABOVE THEN

SLAB 7. DETERMINE MAXIMUM POST SPACING ON SLAB FROM TABLE 2.5
SLAB 8. USE THE SMALLER OF THE POST SPACING ON SLAB OR HEADER POST SPACING
SLAB 9. FOLLOW **9-11** FROM ABOVE
SLAB 10. FOR **TWO** POST STRUCTURES USE **TABLE 7.1** ON SHEET **M3** FOR SLAB REQUIREMENTS INSTEAD OF THESE TABLES
SLAB11. CHECK TABLES **SLAB1** AND **SLAB2** ON **M5** FOR CORNER DISTANCE REQUIRMENTS.

Amerimax Building Products
5208 Tennyson Parkway
Plano, Texas 75024

Carl Putnam, P. E.
3441 Ivylink Place
Lynchburg, VA 24503
carlputnam@comcast.net

REGISTERED PROFESSIONAL ENGINEER
CARL PUTNAM
C 68139
EXP. 6/30/2009
CIVIL
STATE OF CALIFORNIA

4/27/2009

LATTICE COVER 3.0 POST SPACINGS FOR PATIO AND COMMERCIAL COVERS HIGH WIND AREAS

TABLE 3.1

GROUND SNOW LOAD (PSF)	TRIB WIDTH (FT)	MAX POST SPACING ON SLAB (FT)	POST REQ'D FOR SLAB	0.042"x3"x8" Box Beam (Detail L1) MAX POST SPACING (FT)	Attached Structure MIN POST TYPE	Attached Structure FOOTER SIZE "d" (in)	Freestanding or Multispan Units MAX POST LENGTH 8' CONSTRAINED FOOTER "d" (in)	10' CONSTRAINED FOOTER "d" (in)	12' CONSTRAINED FOOTER "d" (in)	Double 0.042"x3"x8" Box Beam (Detail L12) MAX POST SPACING (FT)	Attached Structure MIN POST TYPE	Attached Structure FOOTER SIZE "d" (in)	Freestanding or Multispan Units MAX POST LENGTH 8' CONSTRAINED FOOTER "d" (in)	10' CONSTRAINED FOOTER "d" (in)	12' CONSTRAINED FOOTER "d" (in)	Double 0.032"x2"x6.625" Box Beam (Detail L12) MAX POST SPACING (FT)	Attached Structure MIN POST TYPE	Attached Structure FOOTER SIZE "d" (in)	Freestanding or Multispan Units MAX POST LENGTH 8' CONSTRAINED FOOTER "d" (in)	10' CONSTRAINED FOOTER "d" (in)	12' CONSTRAINED FOOTER "d" (in)
105 MPH EXPOSURE C																					
10 LIVE	3	22'-8"	A	15'-0"	A	22	28	30	32	22'-2"	A	25	31	33	34	15'-8"	A	22	27	29	31
	3.5	19'-5"	A	13'-6"	A	22	28	29	31	20'-7"	B	26	30	32	34	14'-2"	A	23	27	28	30
	4	17'-0"	A	12'-3"	A	23	27	29	30	19'-3"	B	26	30	32	33	12'-11"	A	23	26	28	29
	4.5	15'-1"	A	11'-2"	A	23	26	28	30	18'-2"	B	27	29	31	33	11'-11"	A	23	26	27	29
	5	13'-7"	A	10'-4"	A	23	26	28	29	17'-3"	B	27	29	31	32	11'-0"	A	23	25	27	28
	5.5	12'-4"	A	9'-7"	A	23	26	27	29	16'-2"	B	27	29	30	32	10'-3"	A	24	25	27	28
	6	11'-4"	A	8'-11"	A	23	25	27	28	15'-2"	B	28	28	30	32	9'-8"	A	24	25	26	28
	6.5	10'-5"	A	8'-5"	A	23	25	27	28	14'-4"	C	28	28	30	31	9'-1"	A	24	24	26	27
	7	9'-8"	A	7'-11"	A	23	25	26	28	13'-7"	C	28	28	29	31	8'-7"	A	24	24	26	27
	7.5	9'-1"	A	7'-5"	A	24	24	26	27	12'-11"	C	28	28	29	31	8'-1"	A	24	24	25	27
	8	8'-6"	A	7'-1"	A	24	24	26	27	12'-4"	C	28	28	29	30	7'-9"	A	24	24	25	27
	8.5	8'-0"	A	6'-9"	A	24	24	25	27	11'-9"	C	29	29	29	30	7'-4"	A	24	24	25	26
	9	7'-6"	A	6'-5"	A	24	24	25	27	11'-3"	C	29	29	29	30	7'-0"	A	25	25	25	26
	9.5	7'-2"	A	6'-1"	A	24	24	25	26	10'-10"	C	29	29	29	29	6'-9"	A	25	25	25	26
	10	6'-9"	A	5'-10"	A	24	24	25	26	10'-5"	C	29	29	29	29	6'-5"	A	25	25	25	26
	11	6'-2"	A	5'-4"	A	24	24	24	26	9'-8"	C	29	29	29	29	5'-11"	A	25	25	25	25
	12	5'-8"	A	5'-0"	A	24	24	24	26	9'-0"	C	29	29	29	29	5'-6"	A	25	25	25	26
	13	5'-2"	A	4'-7"	A	24	24	25	26	8'-5"	C	29	29	29	29	5'-2"	A	25	25	25	26
110 MPH EXPOSURE C																					
10 LIVE	3	22'-8"	A	15'-0"	A	23	29	31	32	22'-2"	A	26	32	34	35	15'-8"	A	23	28	30	31
	3.5	19'-5"	A	13'-6"	A	23	28	30	32	20'-7"	B	26	31	33	35	14'-2"	A	23	27	29	31
	4	17'-0"	A	12'-3"	A	23	28	29	31	19'-3"	B	27	31	32	34	12'-11"	A	24	27	29	30
	4.5	15'-1"	A	11'-2"	A	23	27	29	30	18'-2"	B	28	30	32	34	11'-11"	A	24	26	28	30
	5	13'-7"	A	10'-4"	A	24	27	28	30	17'-3"	B	28	30	32	33	11'-0"	A	24	26	28	29
	5.5	12'-4"	A	9'-7"	A	24	26	28	29	16'-2"	B	28	29	31	33	10'-3"	A	24	26	27	29
	6	11'-4"	A	8'-11"	A	24	26	28	29	15'-2"	B	29	29	31	32	9'-8"	A	25	25	27	28
	6.5	10'-5"	A	8'-5"	A	24	25	27	29	14'-4"	C	29	29	30	32	9'-1"	A	25	25	27	28
	7	9'-8"	A	7'-11"	A	24	25	27	28	13'-7"	C	29	29	30	32	8'-7"	A	25	25	26	28
	7.5	9'-1"	A	7'-5"	A	24	25	27	28	12'-11"	C	29	29	30	31	8'-1"	A	25	25	26	27
	8	8'-6"	A	7'-1"	A	24	25	26	28	12'-4"	C	29	29	29	31	7'-9"	A	25	25	26	27
	8.5	8'-0"	A	6'-9"	A	24	24	26	27	11'-9"	C	30	30	30	31	7'-4"	A	25	25	25	27
	9	7'-6"	A	6'-5"	A	25	25	26	27	11'-3"	C	30	30	30	30	7'-0"	A	25	25	25	27
	9.5	7'-2"	A	6'-1"	A	25	25	26	27	10'-10"	C	30	30	30	30	6'-9"	A	25	25	25	27
	10	6'-9"	A	5'-10"	A	25	25	25	27	10'-5"	C	30	30	30	30	6'-5"	A	26	26	26	26
	11	6'-2"	A	5'-4"	A	25	25	25	26	9'-8"	C	30	30	30	30	5'-11"	A	26	26	26	26
	12	5'-8"	A	5'-0"	A	25	25	25	27	9'-0"	C	30	30	30	30	5'-6"	A	26	26	26	27
	13	5'-2"	A	4'-7"	A	25	25	25	27	8'-5"	C	30	30	30	30	5'-2"	A	26	26	26	27
105 MPH EXPOSURE C																					
20 LIVE	3	11'-10"	A	9'-4"	A	19	25	27	29	15'-9"	B	22	29	30	32	10'-1"	A	19	25	26	28
	3.5	10'-2"	A	8'-3"	A	19	25	26	28	14'-2"	C	23	28	30	31	8'-11"	A	19	24	26	27
	4	8'-11"	A	7'-5"	A	19	24	26	27	12'-10"	C	23	27	29	30	8'-1"	A	20	24	25	27
	4.5	7'-11"	A	6'-8"	A	19	24	25	27	11'-9"	C	23	27	28	30	7'-4"	A	20	23	25	26
	5	7'-1"	A	6'-1"	A	19	23	25	26	10'-10"	C	23	26	28	29	6'-9"	A	20	23	24	26
	5.5	6'-5"	A	5'-8"	A	19	23	25	26	10'-1"	C	23	26	28	29	6'-3"	A	20	23	24	26
	6	5'-11"	A	5'-3"	A	19	23	24	26	9'-5"	C	24	26	27	29	5'-9"	A	20	22	24	25
	6.5	5'-5"	A	4'-10"	A	19	22	24	25	8'-10"	C	24	25	27	28	5'-5"	A	20	22	24	25
	7	5'-1"	A	4'-6"	A	20	22	24	25	8'-4"	C	24	25	26	28	5'-1"	B	20	22	23	25
	7.5	4'-9"	A	4'-3"	A	20	22	23	25	7'-10"	C	24	25	26	28	4'-9"	B	20	21	23	24
	8	4'-5"	A	4'-0"	A	20	22	23	25	7'-5"	C	24	24	26	27	4'-6"	B	20	21	23	24
	8.5	4'-2"	A	3'-10"	A	20	21	23	24	7'-1"	C	24	24	26	27	4'-3"	B	20	21	23	24
	9	3'-11"	A	3'-7"	A	20	22	23	25	6'-9"	C	24	24	25	27	4'-1"	B	20	22	23	25
	9.5	3'-9"	A	3'-5"	A	20	22	23	25	6'-5"	C	24	24	25	27	3'-10"	B	21	22	23	25
	10	3'-6"	A	3'-3"	A	20	22	24	25	6'-2"	C	24	24	25	26	3'-8"	B	21	22	24	25
	11	3'-2"	A	3'-0"	A	20	23	24	25	5'-8"	C	24	24	25	26	3'-5"	B	21	23	24	25
	12	2'-11"	A	2'-9"	A	20	23	24	26	5'-3"	C	25	25	25	26	3'-1"	B	21	23	24	26
	13	2'-8"	A	2'-6"	A	20	23	25	26	4'-10"	C	25	25	25	26	2'-11"	B	21	23	25	26

TABLE 3.1

GROUND SNOW LOAD (PSF)	TRIB WIDTH (FT)	MAX POST SPACING ON SLAB (FT)	POST REQ'D FOR SLAB	0.042"x3"x8" Box Beam (Detail L1) MAX POST SPACING (FT)	Attached Structure MIN POST TYPE	Attached Structure FOOTER SIZE "d" (in)	Freestanding or Multispan Units MAX POST LENGTH 8' CONSTRAINED FOOTER "d" (in)	10' CONSTRAINED FOOTER "d" (in)	12' CONSTRAINED FOOTER "d" (in)	Double 0.042"x3"x8" Box Beam (Detail L12) MAX POST SPACING (FT)	Attached Structure MIN POST TYPE	Attached Structure FOOTER SIZE "d" (in)	Freestanding or Multispan Units MAX POST LENGTH 8' CONSTRAINED FOOTER "d" (in)	10' CONSTRAINED FOOTER "d" (in)	12' CONSTRAINED FOOTER "d" (in)	Double 0.032"x2"x6.625" Box Beam (Detail L12) MAX POST SPACING (FT)	Attached Structure MIN POST TYPE	Attached Structure FOOTER SIZE "d" (in)	Freestanding or Multispan Units MAX POST LENGTH 8' CONSTRAINED FOOTER "d" (in)	10' CONSTRAINED FOOTER "d" (in)	12' CONSTRAINED FOOTER "d" (in)
105 MPH EXPOSURE C																					
25	3	9'-7"	A	9'-0"	A	18	25	27	28	15'-3"	C	22	28	30	32	9'-8"	B	19	25	26	28
	3.5	8'-2"	A	7'-11"	A	19	25	26	28	13'-8"	C	22	28	29	31	8'-8"	B	19	24	26	27
	4	7'-2"	A	7'-1"	A	19	24	26	27	12'-5"	C	23	27	29	30	7'-9"	B	19	24	25	27
	4.5	6'-4"	A	6'-5"	B	19	24	25	27	11'-4"	C	23	27	28	30	7'-1"	B	20	23	25	26
	5	5'-9"	A	5'-11"	B	19	23	25	26	10'-6"	C	23	26	28	29	6'-6"	B	20	23	24	26
	5.5	5'-2"	A	5'-5"	B	19	23	24	26	9'-9"	C	23	26	27	29	6'-0"	B	20	22	24	25
	6	4'-9"	A	5'-0"	B	19	22	24	25	9'-1"	C	23	25	27	28	5'-7"	B	20	22	24	25
	6.5	4'-5"	A	4'-8"	B	19	22	24	25	8'-6"	C	23	25	27	28	5'-2"	B	20	22	23	25
	7	4'-1"	A	4'-4"	B	19	22	23	25	8'-0"	C	24	25	26	28	4'-10"	B	20	22	23	25
	7.5	3'-10"	A	4'-1"	B	19	22	23	25	7'-7"	C	24	24	26	27	4'-7"	B	20	21	23	24
	8	3'-7"	A	3'-10"	B	19	21	23	24	7'-2"	C	24	24	26	27	4'-4"	B	20	21	23	24
	8.5	3'-4"	A	3'-8"	B	19	21	23	24	6'-10"	C	24	24	25	27	4'-1"	B	20	21	23	24
	9	3'-2"	A	3'-5"	B	19	22	23	25	6'-6"	C	24	24	25	27	3'-11"	B	20	22	23	25
	9.5	3'-0"	A	3'-3"	B	19	22	23	25	6'-2"	C	24	24	25	26	3'-8"	B	20	22	23	25
110 MPH EXPOSURE C																					
25	3	9'-7"	A	9'-0"	A	19	26	28	29	15'-3"	C	23	29	31	32	9'-8"	B	20	25	27	28
	3.5	8'-2"	A	7'-11"	A	19	25	27	28	13'-8"	C	23	28	30	32	8'-8"	B	20	25	26	28
	4	7'-2"	A	7'-1"	A	19	25	26	28	12'-5"	C	23	28	29	31	7'-9"	B	20	24	26	27
	4.5	6'-4"	A	6'-5"	B	20	24	26	27	11'-4"	C	24	27	29	30	7'-1"	B	20	24	25	27
	5	5'-9"	A	5'-11"	B	20	24	25	27	10'-6"	C	24	27	28	30	6'-6"	B	20	23	25	26
	5.5	5'-2"	A	5'-5"	B	20	23	25	26	9'-9"	C	24	26	28	29	6'-0"	B	20	23	25	26
	6	4'-9"	A	5'-0"	B	20	23	25	26	9'-1"	C	24	26	28	29	5'-7"	B	21	23	24	26
	6.5	4'-5"	A	4'-8"	B	20	23	24	26	8'-6"	C	24	26	27	29	5'-2"	B	21	22	24	25
	7	4'-1"	A	4'-4"	B	20	22	24	25	8'-0"	C	24	25	27	28	4'-10"	B	21	22	24	25
	7.5	3'-10"	A	4'-1"	B	20	22	24	25	7'-7"	C	24	25	27	28	4'-7"	B	21	22	23	25
	8	3'-7"	A	3'-10"	B	20	22	23	25	7'-2"	C	25	25	26	28	4'-4"	B	21	22	23	25
	8.5	3'-4"	A	3'-8"	B	20	22	24	25	6'-10"	C	25	25	26	27	4'-1"	B	21	22	24	25
	9	3'-2"	A	3'-5"	B	20	22	24	25	6'-6"	C	25	25	26	27	3'-11"	B	21	22	24	25
	9.5	3'-0"	A	3'-3"	B	20	22	24	25	6'-2"	C	25	25	26	27	3'-8"	B	21	22	24	25
110 MPH EXPOSURE C																					
30	3	8'-0"	A	7'-10"	A	18	25	27	28	13'-6"	C	22	28	30	32	8'-6"	B	19	25	26	28
	3.5	6'-10"	A	6'-11"	B	18	24	26	28	12'-1"	C	22	28	29	31	7'-6"	B	19	24	26	27
	4	6'-0"	A	6'-2"	B	18	24	26	27	10'-11"	C	22	27	29	30	6'-9"	B	19	23	25	27
	4.5	5'-4"	A	5'-6"	B	19	23	25	26	9'-11"	C	23	26	28	30	6'-2"	B	19	23	25	26
	5	4'-10"	A	5'-1"	B	19	23	25	26	9'-2"	C	23	26	28	29	5'-7"	B	19	23	24	26
	5.5	4'-4"	A	4'-8"	B	19	23	24	26	8'-6"	C	23	26	27	29	5'-2"	B	19	22	24	25
	6	4'-0"	A	4'-3"	B	19	22	24	25	7'-10"	C	23	25	27	28	4'-9"	B	20	22	24	25
	6.5	3'-8"	A	4'-0"	B	19	22	24	25	7'-4"	C	23	25	26	28	4'-6"	B	20	22	23	25
	7	3'-5"	A	3'-8"	B	19	22	23	25	6'-11"	C	23	24	26	28	4'-2"	B	20	21	23	25
	7.5	3'-2"	A	3'-6"	B	19	22	23	25	6'-6"	C	23	24	26	27	3'-11"	B	20	21	23	25
	8	3'-0"	A	3'-3"	B	19	22	23	25	6'-2"	C	23	24	26	27	3'-8"	B	20	22	23	25
	8.5	2'-10"	A	3'-1"	B	19	22	24	25	5'-10"	C	23	24	25	27	3'-6"	B	20	22	24	25
	9	2'-8"	A	2'-11"	B	19	22	24	25	5'-7"	C	23	23	25	27	3'-4"	B	20	22	24	25
105 MPH EXPOSURE C																					
30	3	8'-0"	A	7'-10"	A	18	25	26	28	13'-6"	C	21	28	29	31						
	3.5	6'-10"	A	6'-11"	B	18	24	25	27	12'-1"	C	21	27	29	30						
	4	6'-0"	A	6'-2"	B	18	23	25	26	10'-11"	C	22	26	28	29						
	4.5	5'-4"	A	5'-6"	B	18	23	24	26	9'-11"	C	22	26	27	29						
	5	4'-10"	A	5'-1"	B	18	22	24	25	9'-2"	C	22	25	27	28						
	5.5	4'-4"	A	4'-8"	B	18	22	24	25	8'-6"	C	22	25	27	28						
	6	4'-0"	A	4'-3"	B	18	22	23	25	7'-10"	C	22	25	26	28						
	6.5	3'-8"	A	4'-0"	B	18	22	23	24	7'-4"	C	22	24	26	27						
	7	3'-5"	A	3'-8"	B	18	21	23	24	6'-11"	C	22	24	26	27						
	7.5	3'-2"	A	3'-6"	B	18	21	23	24	6'-6"	C	23	24	25	27						
	8	3'-0"	A	3'-3"	B	18	21	23	24	6'-2"	C	23	23	25	26						
	8.5	2'-10"	A	3'-1"	B	18	21	23	24	5'-10"	C	23	23	25	26						
	9	2'-8"	A	2'-11"	B	18	22	23	25	5'-7"	C	23	23	24	26						

4/27/2009

LATTICE COVER 3.0 POST SPACINGS FOR PATIO AND COMMERCIAL COVERS HIGH WIND AREAS

TABLE 3.1

GROUND SNOW LOAD (PSF)	TRIB WIDTH (FT)	MAX POST SPACING ON SLAB (FT)	POST REQ'D FOR SLAB	0.042"x3"x8" Box Beam (Detail L1) MAX POST SPACING (FT)	Attached Structure MIN POST TYPE	Attached Structure FOOTER SIZE "d" (in)	Freestanding or Multispan Units MAX POST LENGTH 8' CONSTRAINED FOOTER "d" (in)	10' CONSTRAINED FOOTER "d" (in)	12' CONSTRAINED FOOTER "d" (in)	Double 0.042"x3"x8" Box Beam (Detail L12) MAX POST SPACING (FT)	Attached Structure MIN POST TYPE	Attached Structure FOOTER SIZE "d" (in)	Freestanding or Multispan Units MAX POST LENGTH 8' CONSTRAINED FOOTER "d" (in)	10' CONSTRAINED FOOTER "d" (in)	12' CONSTRAINED FOOTER "d" (in)	Double 0.032"x2"x6.625" Box Beam (Detail L12) MAX POST SPACING (FT)	Attached Structure MIN POST TYPE	Attached Structure FOOTER SIZE "d" (in)	Freestanding or Multispan Units MAX POST LENGTH 8' CONSTRAINED FOOTER "d" (in)	10' CONSTRAINED FOOTER "d" (in)	12' CONSTRAINED FOOTER "d" (in)
110 MPH EXPOSURE C																					
20 LIVE	3	11'-10"	A	9'-4"	A	19	26	28	29	15'-9"	B	23	29	31	33	10'-1"	A	20	25	27	29
	3.5	10'-2"	A	8'-3"	A	20	25	27	29	14'-2"	C	23	29	30	32	8'-11"	A	20	25	26	28
	4	8'-11"	A	7'-5"	A	20	25	26	28	12'-10"	C	24	28	30	31	8'-1"	A	20	24	26	27
	4.5	7'-11"	A	6'-8"	A	20	24	26	27	11'-9"	C	24	27	29	31	7'-4"	A	20	24	25	27
	5	7'-1"	A	6'-1"	A	20	24	26	27	10'-10"	C	24	27	29	30	6'-9"	A	21	23	25	27
	5.5	6'-5"	A	5'-8"	A	20	24	25	27	10'-1"	C	24	26	28	30	6'-3"	A	21	23	25	26
	6	5'-11"	A	5'-3"	A	20	23	25	26	9'-5"	C	24	26	28	29	5'-9"	A	21	23	24	26
	6.5	5'-5"	A	4'-10"	A	20	23	24	26	8'-10"	C	25	26	27	29	5'-5"	A	21	22	24	26
	7	5'-1"	A	4'-6"	A	20	23	24	26	8'-4"	C	25	25	27	29	5'-1"	B	21	22	24	25
	7.5	4'-9"	A	4'-3"	A	20	22	24	25	7'-10"	C	25	25	27	28	4'-9"	B	21	22	24	25
	8	4'-5"	A	4'-0"	A	20	22	24	25	7'-5"	C	25	25	27	28	4'-6"	B	21	22	23	25
	8.5	4'-2"	A	3'-10"	A	20	22	24	25	7'-1"	C	25	25	26	28	4'-3"	B	21	22	24	25
	9	3'-11"	A	3'-7"	A	20	22	24	25	6'-9"	C	25	25	26	27	4'-1"	B	21	22	24	25
	9.5	3'-9"	A	3'-5"	A	20	22	24	25	6'-5"	C	25	25	26	27	3'-10"	B	21	22	24	25
	10	3'-6"	A	3'-3"	A	20	23	24	26	6'-2"	C	25	25	26	27	3'-8"	B	21	23	24	26
	11	3'-2"	A	3'-0"	A	20	23	25	26	5'-8"	C	25	25	25	27	3'-5"	B	21	23	25	26
120 MPH EXPOSURE C																					
20 LIVE	3	11'-10"	A	9'-4"	A	21	27	29	31	15'-9"	B	24	31	32	34	10'-1"	A	21	27	28	30
	3.5	10'-2"	A	8'-3"	A	21	27	28	30	14'-2"	C	25	30	32	33	8'-11"	A	21	26	28	29
	4	8'-11"	A	7'-5"	A	21	26	28	29	12'-10"	C	25	29	31	33	8'-1"	A	21	25	27	29
	4.5	7'-11"	A	6'-8"	A	21	25	27	29	11'-9"	C	25	29	30	32	7'-4"	A	22	25	27	28
	5	7'-1"	A	6'-1"	A	21	25	27	28	10'-10"	C	26	28	30	31	6'-9"	A	22	25	26	28
	5.5	6'-5"	A	5'-8"	A	21	25	26	28	10'-1"	C	26	28	29	31	6'-3"	A	22	24	26	27
	6	5'-11"	A	5'-3"	A	21	24	26	27	9'-5"	C	26	27	29	31	5'-9"	A	22	24	25	27
	6.5	5'-5"	A	4'-10"	A	21	24	26	27	8'-10"	C	26	27	29	30	5'-5"	A	22	24	25	27
	7	5'-1"	A	4'-6"	A	21	24	25	27	8'-4"	C	26	27	28	30	5'-1"	B	22	23	25	26
	7.5	4'-9"	A	4'-3"	A	21	23	25	26	7'-10"	C	26	26	28	30	4'-9"	B	22	23	25	26
	8	4'-5"	A	4'-0"	A	21	23	25	26	7'-5"	C	26	26	28	29	4'-6"	B	22	23	24	26
	8.5	4'-2"	A	3'-10"	A	22	23	25	26	7'-1"	C	26	26	27	29	4'-3"	B	22	23	25	26
	9	3'-11"	A	3'-7"	A	22	23	25	26	6'-9"	C	27	27	27	29	4'-1"	B	22	23	25	26
	9.5	3'-9"	A	3'-5"	A	22	23	25	27	6'-5"	C	27	27	27	28	3'-10"	B	22	23	25	27
130 MPH EXPOSURE C																					
20 LIVE	3	11'-10"	A	9'-4"	A	22	28	30	32	15'-9"	B	26	32	34	35	10'-1"	A	22	28	29	31
	3.5	10'-2"	A	8'-3"	A	22	28	29	31	14'-2"	C	26	31	33	35	8'-11"	A	22	27	29	30
	4	8'-11"	A	7'-5"	A	22	27	29	30	12'-10"	C	26	30	32	34	8'-1"	A	23	26	28	30
	4.5	7'-11"	A	6'-8"	A	22	26	28	30	11'-9"	C	27	30	32	33	7'-4"	A	23	26	28	29
	5	7'-1"	A	6'-1"	A	22	26	28	29	10'-10"	C	27	29	31	33	6'-9"	A	23	26	27	29
	5.5	6'-5"	A	5'-8"	A	22	26	27	29	10'-1"	C	27	29	31	32	6'-3"	A	23	25	27	28
	6	5'-11"	A	5'-3"	A	22	25	27	29	9'-5"	C	27	28	30	32	5'-9"	A	23	25	27	28
	6.5	5'-5"	A	4'-10"	A	23	25	27	28	8'-10"	C	27	28	30	31	5'-5"	A	23	24	26	28
	7	5'-1"	A	4'-6"	A	23	25	26	28	8'-4"	C	28	28	29	31	5'-1"	B	23	24	26	27
	7.5	4'-9"	A	4'-3"	A	23	24	26	28	7'-10"	C	28	28	29	31	4'-9"	B	24	24	26	27
	8	4'-5"	A	4'-0"	A	23	24	26	27	7'-5"	C	28	28	29	30	4'-6"	B	24	24	25	27
	8.5	4'-2"	A	3'-10"	A	23	24	26	27	7'-1"	C	28	28	29	30	4'-3"	B	24	24	26	27
	9	3'-11"	A	3'-7"	A	23	24	26	27	6'-9"	C	28	28	28	30	4'-1"	B	24	24	26	27
	9.5	3'-9"	A	3'-5"	A	23	24	26	28	6'-5"	C	28	28	28	30	3'-10"	B	24	24	26	28
	10	3'-6"	A	3'-3"	A	23	25	26	28	6'-2"	C	28	28	28	29	3'-8"	B	24	25	26	28

TABLE 3.1

GROUND SNOW LOAD (PSF)	TRIB WIDTH (FT)	MAX POST SPACING ON SLAB (FT)	POST REQ'D FOR SLAB	0.042"x3"x8" Box Beam (Detail L1) MAX POST SPACING (FT)	Attached Structure MIN POST TYPE	Attached Structure FOOTER SIZE "d" (in)	Freestanding or Multispan Units MAX POST LENGTH 8' CONSTRAINED FOOTER "d" (in)	10' CONSTRAINED FOOTER "d" (in)	12' CONSTRAINED FOOTER "d" (in)	Double 0.042"x3"x8" Box Beam (Detail L12) MAX POST SPACING (FT)	Attached Structure MIN POST TYPE	Attached Structure FOOTER SIZE "d" (in)	Freestanding or Multispan Units MAX POST LENGTH 8' CONSTRAINED FOOTER "d" (in)	10' CONSTRAINED FOOTER "d" (in)	12' CONSTRAINED FOOTER "d" (in)	Double 0.032"x2"x6.625" Box Beam (Detail L12) MAX POST SPACING (FT)	Attached Structure MIN POST TYPE	Attached Structure FOOTER SIZE "d" (in)	Freestanding or Multispan Units MAX POST LENGTH 8' CONSTRAINED FOOTER "d" (in)	10' CONSTRAINED FOOTER "d" (in)	12' CONSTRAINED FOOTER "d" (in)
110 MPH EXPOSURE C																					
40	3	6'-1"	A	6'-2"	B	17	24	26	27	11'-0"	C	20	27	29	30	6'-10"	B	17	24	25	27
	3.5	5'-2"	A	5'-5"	B	17	23	25	26	9'-9"	C	21	26	28	29	6'-0"	B	18	23	25	26
	4	4'-6"	A	4'-10"	B	17	23	24	26	8'-9"	C	21	26	27	29	5'-4"	B	18	22	24	25
	4.5	4'-0"	A	4'-4"	B	17	22	24	25	7'-11"	C	21	25	27	28	4'-10"	B	18	22	24	25
	5	3'-7"	A	3'-11"	B	17	22	24	25	7'-3"	C	21	25	26	28	4'-5"	B	18	22	23	25
	5.5	3'-3"	A	3'-7"	B	17	22	23	25	6'-9"	C	21	24	26	27	4'-1"	B	18	21	23	24
	6	3'-0"	A	3'-4"	B	17	21	23	24	6'-3"	C	21	24	26	27	3'-9"	B	18	21	23	24
	6.5	2'-9"	A	3'-1"	B	17	21	23	24	5'-10"	C	21	24	25	27	3'-6"	B	18	21	23	24
	7	2'-7"	A	2'-10"	B	17	21	23	24	5'-5"	C	21	23	25	26	3'-3"	B	18	21	23	24
	7.5	2'-5"	A	2'-8"	B	17	21	23	25	5'-1"	C	21	23	25	26	3'-1"	B	18	21	23	25
	8	2'-3"	A	2'-6"	B	17	22	23	25	4'-10"	C	22	23	24	26	2'-10"	B	18	22	23	25
	8.5	2'-1"	A	2'-4"	B	17	22	24	25	4'-7"	C	22	23	24	26	2'-8"	B	18	22	24	25
110 MPH EXPOSURE C																					
60	3	4'-1"	A	4'-4"	B	15	22	24	25	8'-0"	C	18	25	27	28	4'-11"	B	16	22	24	25
	3.5	3'-6"	A	3'-9"	B	15	22	23	25	7'-1"	C	19	25	26	28	4'-3"	B	16	22	23	25
	4	3'-0"	A	3'-4"	B	15	21	23	24	6'-3"	C	19	24	26	27	3'-9"	B	16	21	23	24
	4.5	2'-8"	A	3'-0"	B	15	21	23	24	5'-8"	C	19	24	25	27	3'-5"	B	16	21	22	24
	5	2'-5"	A	2'-8"	B	15	21	22	24	5'-2"	C	19	23	25	26	3'-1"	B	16	20	22	23
	5.5	2'-2"	A	2'-6"	B	15	20	22	23	4'-9"	C	19	23	24	26	2'-10"	B	16	20	22	23
	6	2'-0"	A	2'-3"	B	15	21	22	24	4'-5"	C	19	22	24	25	2'-7"	B	16	21	22	24
	6.5	1'-10"	A	2'-1"	B	15	21	23	24	4'-1"	C	19	22	24	25	2'-5"	B	16	21	23	24
	7	1'-9"	A	1'-11"	B	15	21	23	24	3'-10"	C	19	22	23	25	2'-3"	B	16	21	23	24

TABLE 3.2 TRIBUTARY WIDTHS FOR SINGLE SPAN ATTACHED STRUCTURES

OVER-HANG (FT)	PROJECTION OF SINGLE SPAN STUCTURES (FT) 8'	9'	10'	11'	12'	13'	14'	15'	16'	17'	18'	19'	20'	21'	22'
0'	4'	4.5'	5'	5.5'	6'	6.5'	7'	7.5'	8'	8.5'	9'	9.5'	10'	10.5'	11'
1'	4.5'	5'	5.5'	6'	6.5'	7'	7.5'	8'	8.5'	9'	9.5'	10'	10.5'	11'	11.5'
2'	5'	5.5'	6'	6.5'	7'	7.5'	8'	8.5'	9'	9.5'	10'	10.5'	11'	11.5'	12'
3'	5.5'	6'	6.5'	7'	7.5'	8'	8.5'	9'	9.5'	10'	10.5'	11'	11.5'	12'	12.5'
4'	6'	6.5'	7'	7.5'	8'	8.5'	9'	9.5'	10'	10.5'	11'	11.5'	12'	12.5'	13'
5'	6.5'	7'	7.5'	8'	8.5'	9'	9.5'	10'	10.5'	11'	11.5'	12'	12.5'	13'	13.5'

TABLE 3.3 Post Requirements for Attached Structures

Post Description	Max Hgt	POST
Twin 0.062"x1.5"x1.5" ScrolL	9'	A
0.042"x3"x8" Aluminum Post	11'	B
0.024"Post with Sideplates	12'	B
Clover 0.032"x3"x3" Alum	12'	B
Clover 0.040"x3"x3" Alum	12'	B
Colonial 0.062" Extruded	12'	C
0.041"x3"x3" Steel Clover	12'	D
0.041"x3"x3" Steel Clover	8'	E
3/16"x3"x3" Steel Square	15'	F
3/16"x4"x4" Steel Square	18'	G
5/16"x4"x4" Steel Square	18'	H

TABLE 3.4 Post Requirements for Freestanding Structures

Post Description	Maximum Footing	Max Height	POST
0.041"x3"x3" Steel Clover	d = 23"	12'	D
0.041"x3"x3" Steel Clover	d = 23"	8'	E
3/16"x3"x3" Steel Square	d = 32"	15'	F
3/16"x4"x4" Steel Square	d = 38"	18'	G
5/16"x4"x4" Steel Square	d = 42"	18'	H

GENERAL INSTRUCTIONS FOR THESE TABLES

1. CHOOSE FREESTANDING OR ATTACHED STRUCTURE
2. CHOOSE PROJECTION, WIDTH AND OVERHANG OF UNIT
3. DETERMINE WIND AND LIVE OR SNOW LOAD OF STRUCTURE SITE (PATIO UNITS USE 10 PSF MIN, COMMERCIAL UNITS USE 20PSF MIN)
4. CHOOSE A RAFTER FROM TABLES 1.1 TO 1.8 THAT HAS ADEQUATE CLEARSPAN FOR YOUR NEEDS.
5. DETERMINE TRIBUTARY WIDTH FROM TABLE 3.2 OR CALCULATE FROM TRIBUTARY DIAGRAM ON **SC02 PAGE 2 OF 2**
6. CHOOSE A HEADER FROM TABLE 3.1 THAT HAS ADEQUATE POST SPACING.
7. USE THE APPROPRIATE FOOTER SIZE SHOWN.
8. FOR SINGLE SPAN ATTACHED UNIT USE THE POST SHOWN UPGRADE THE POST IF THE HEIGHT IS NOT SUFFICIENT FREESTANDING AND MULTISPAN UNITS USE TABLE 3.4
9. FIND THE O/C SPACING OR # OF FASTENERS FOR ATTACHING TO WALL FROM TABLE 7.6
10. USE THE APPROPRIATE DETAILS
11. ALL LATTICE **NOT** USING **DETAIL L29** MUST COMPLY WITH TABLES **L1** AND **L2** ON SHEET **M5**

FOR PATIO SLABS FOLLOW 1-6 FROM ABOVE THEN

SLAB 7. DETERMINE MAXIMUM POST SPACING ON SLAB FROM TABLE 3.1
SLAB 8. USE THE SMALLER OF THE POST SPACING ON SLAB OR HEADER POST SPACING
SLAB 9. FOLLOW **9-11** FROM ABOVE
SLAB 10. FOR **TWO** POST STRUCTURES USE **TABLE 7.1** ON SHEET **M3** FOR SLAB REQUIREMENTS INSTEAD OF THESE TABLES
SLAB11. CHECK TABLES **SLAB1** AND **SLAB2** ON **M5** FOR CORNER DISTANCE REQUIRMENTS.

Amerimax Building Products
5208 Tennyson Parkway
Plano, Texas 75024

Carl Putnam, P. E.
3441 Ivylink Place
Lynchburg, VA 24503
carlputnam@comcast.net

REGISTERED PROFESSIONAL ENGINEER
CARL PUTNAM
C 68139
EXP. 6/30/2009
CIVIL
STATE OF CALIFORNIA

4/27/2009

LATTICE COVER 3.0 POST SPACINGS FOR PATIO AND COMMERCIAL COVERS HIGH WIND AREAS

TABLE 3.5

GROUND SNOW LOAD (PSF)	TRIB WIDTH (FT)	MAX POST SPACING ON SLAB (FT)	POST REQ'D FOR SLAB	12 Ga 3"x8" Steel C Beam (Detail L18) MAX POST SPACING (FT)	Attached Structure MIN POST TYPE	Attached Structure FOOTER SIZE "d" (in)	Freestanding or Multispan Units MAX POST LENGTH 8' CONSTRAINED FOOTER "d" (in)	12' CONSTRAINED FOOTER "d" (in)	18' CONSTRAINED FOOTER "d" (in)	16 Ga 3"x8" Steel C Beam (Detail L18) MAX POST SPACING (FT)	Attached Structure MIN POST TYPE	Attached Structure FOOTER SIZE "d" (in)	Freestanding or Multispan Units MAX POST LENGTH 8' CONSTRAINED FOOTER "d" (in)	12' CONSTRAINED FOOTER "d" (in)	18' CONSTRAINED FOOTER "d" (in)	Double 12 Ga 3"x8" Steel C Beam (Detail L8) MAX POST SPACING (FT)	Attached Structure MIN POST TYPE	Attached Structure FOOTER SIZE "d" (in)	Freestanding or Multispan Units MAX POST LENGTH 8' CONSTRAINED FOOTER "d" (in)	12' CONSTRAINED FOOTER "d" (in)	18' CONSTRAINED FOOTER "d" (in)
105 MPH EXPOSURE C																					
10 LIVE	3	22'-8"	A	30'-0"	B	28	33	37	NA	26'-7"	B	26	32	36	NA	30'-0"	B	28	33	37	NA
	3.5	19'-5"	A	30'-0"	C	29	33	37	NA	24'-6"	B	27	32	35	NA	30'-0"	C	29	33	37	NA
	4	17'-0"	A	29'-5"	C	30	33	37	NA	22'-5"	B	28	31	34	NA	30'-0"	C	30	33	37	NA
	4.5	15'-1"	A	28'-4"	C	31	33	36	NA	20'-9"	C	28	30	34	NA	30'-0"	C	32	33	37	NA
	5	13'-7"	A	27'-5"	C	32	32	36	NA	19'-4"	C	28	30	33	NA	30'-0"	C	33	33	37	NA
	5.5	12'-4"	A	26'-7"	C	32	32	36	NA	18'-1"	C	29	29	33	NA	30'-0"	D	34	34	37	NA
	6	11'-4"	A	25'-10"	C	33	33	36	NA	17'-0"	C	29	29	32	NA	30'-0"	D	35	35	37	NA
	6.5	10'-5"	A	25'-3"	D	34	34	35	NA	16'-0"	C	29	29	32	NA	30'-0"	D	36	36	37	NA
	7	9'-8"	A	24'-7"	D	34	34	35	NA	15'-2"	C	29	29	32	NA	30'-0"	D	37	37	37	NA
	7.5	9'-1"	A	24'-1"	D	35	35	35	NA	14'-5"	C	29	29	31	NA	30'-0"	D	37	37	37	NA
	8	8'-6"	A	23'-7"	D	35	35	35	NA	13'-9"	C	30	30	31	NA	29'-5"	D	38	38	38	NA
	8.5	8'-0"	A	23'-2"	D	36	36	36	NA	13'-2"	C	30	30	31	NA	28'-10"	D	39	39	39	NA
	9	7'-6"	A	22'-8"	D	36	36	36	NA	12'-7"	C	30	30	30	NA	28'-4"	D	39	39	39	NA
	9.5	7'-2"	A	22'-2"	D	37	37	37	NA	12'-1"	C	30	30	30	NA	27'-10"	D	40	40	40	NA
	10	6'-9"	A	21'-5"	D	37	37	37	NA	11'-8"	C	30	30	30	NA	27'-5"	D	40	40	40	NA
	11	6'-2"	A	20'-2"	D	37	37	37	NA	10'-10"	C	30	30	30	NA	26'-7"	D	41	41	41	NA
	12	5'-8"	A	19'-1"	D	38	38	38	NA	10'-0"	C	30	30	30	NA	25'-10"	D	42	42	42	NA
	13	5'-2"	A	18'-1"	D	38	38	38	NA	9'-3"	C	30	30	30	NA	25'-3"	E	42	42	42	NA
110 MPH EXPOSURE C																					
10 LIVE	3	22'-8"	A	30'-0"	B	28	34	38	NA	25'-10"	B	27	33	36	NA	30'-0"	B	28	34	38	NA
	3.5	19'-5"	A	29'-10"	C	30	34	38	NA	24'-6"	B	28	32	36	NA	30'-0"	C	30	34	38	NA
	4	17'-0"	A	28'-7"	C	31	34	37	NA	22'-5"	B	28	32	35	NA	30'-0"	C	31	34	38	NA
	4.5	15'-1"	A	27'-7"	C	32	33	37	NA	20'-9"	C	29	31	35	NA	30'-0"	C	33	34	38	NA
	5	13'-7"	A	26'-8"	C	32	33	37	NA	19'-4"	C	29	31	34	NA	30'-0"	C	34	34	38	NA
	5.5	12'-4"	A	25'-10"	C	33	33	36	NA	18'-1"	C	29	30	34	NA	30'-0"	D	35	35	38	NA
	6	11'-4"	A	25'-2"	C	34	34	36	NA	17'-0"	C	30	30	33	NA	30'-0"	D	36	36	38	NA
	6.5	10'-5"	A	24'-6"	C	34	34	36	NA	16'-0"	C	30	30	33	NA	30'-0"	D	37	37	38	NA
	7	9'-8"	A	23'-11"	D	35	35	36	NA	15'-2"	C	30	30	32	NA	29'-10"	D	38	38	38	NA
	7.5	9'-1"	A	23'-5"	D	36	36	36	NA	14'-5"	C	30	30	32	NA	29'-2"	D	38	38	38	NA
	8	8'-6"	A	22'-11"	D	36	36	36	NA	13'-9"	C	30	30	32	NA	28'-7"	D	39	39	39	NA
	8.5	8'-0"	A	22'-6"	D	37	37	37	NA	13'-2"	C	31	31	31	NA	28'-1"	D	39	39	39	NA
	9	7'-6"	A	22'-1"	D	37	37	37	NA	12'-7"	C	31	31	31	NA	27'-7"	D	40	40	40	NA
	9.5	7'-2"	A	21'-8"	D	38	38	38	NA	12'-1"	C	31	31	31	NA	27'-1"	D	40	40	40	NA
	10	6'-9"	A	21'-4"	D	38	38	38	NA	11'-8"	C	31	31	31	NA	26'-8"	D	41	41	41	NA
	11	6'-2"	A	20'-2"	D	38	38	38	NA	10'-10"	C	31	31	31	NA	25'-10"	D	42	42	42	NA
	12	5'-8"	A	19'-1"	D	39	39	39	NA	10'-0"	C	31	31	31	NA	25'-2"	D	43	43	43	NA
	13	5'-2"	A	18'-1"	D	39	39	39	NA	9'-3"	C	31	31	31	NA	24'-6"	D	43	43	43	NA
105 MPH EXPOSURE C																					
20 LIVE	3	11'-10"	A	26'-10"	C	27	32	36	40	17'-8"	C	23	29	33	37	30'-0"	D	28	33	37	41
	3.5	10'-2"	A	25'-6"	D	28	32	35	40	15'-10"	C	23	29	32	36	30'-0"	D	29	33	37	41
	4	8'-11"	A	24'-5"	D	28	32	35	40	14'-4"	C	24	28	31	36	30'-0"	D	30	33	37	41
	4.5	7'-11"	A	23'-5"	D	29	31	35	39	13'-2"	C	24	27	31	35	29'-7"	D	31	33	37	41
	5	7'-1"	A	22'-2"	D	30	31	34	39	12'-2"	C	24	27	30	34	28'-6"	D	32	33	36	41
	5.5	6'-5"	A	20'-11"	D	30	30	34	38	11'-3"	C	24	27	30	34	27'-8"	D	33	33	36	41
	6	5'-11"	A	19'-9"	D	30	30	33	38	10'-7"	C	25	26	29	34	26'-10"	D	33	33	36	40
	6.5	5'-5"	A	18'-9"	D	31	31	33	37	9'-9"	C	25	26	29	33	26'-2"	D	34	34	36	40
	7	5'-1"	A	17'-10"	D	31	31	33	37	9'-1"	C	25	25	28	33	25'-6"	E	35	35	35	40
	7.5	4'-9"	A	17'-1"	D	31	31	32	37	8'-6"	C	25	25	28	32	24'-11"	E	35	35	35	40
	8	4'-5"	A	16'-4"	D	31	31	32	36	7'-11"	C	25	25	28	32	24'-5"	E	36	36	36	40
	8.5	4'-2"	A	15'-8"	D	31	31	32	36	7'-6"	C	25	25	27	32	23'-11"	E	36	36	36	39
	9	3'-11"	A	15'-1"	D	32	32	32	36	7'-1"	C	25	25	27	31	23'-5"	E	37	37	37	39
	9.5	3'-9"	A	14'-6"	D	32	32	32	36	6'-8"	C	25	25	27	31	23'-0"	E	37	37	37	39
	10	3'-6"	A	14'-0"	D	32	32	32	35	6'-4"	C	25	25	27	31	22'-6"	E	37	37	37	39
	11	3'-2"	A	13'-2"	D	32	32	32	35	5'-10"	C	25	25	26	31	20'-7"	E	37	37	37	38
	12	2'-11"	A	12'-4"	D	33	33	33	35	5'-4"	C	25	25	26	30	18'-11"	E	38	38	38	38
	13	2'-8"	A	11'-8"	D	33	33	33	34	4'-11"	C	25	25	26	31	17'-6"	E	38	38	38	38

TABLE 3.5

GROUND SNOW LOAD (PSF)	TRIB WIDTH (FT)	MAX POST SPACING ON SLAB (FT)	POST REQ'D FOR SLAB	12 Ga 3"x8" Steel C Beam (Detail L18) MAX POST SPACING (FT)	Attached Structure MIN POST TYPE	Attached Structure FOOTER SIZE "d" (in)	Freestanding or Multispan Units MAX POST LENGTH 8' CONSTRAINED FOOTER "d" (in)	12' CONSTRAINED FOOTER "d" (in)	18' CONSTRAINED FOOTER "d" (in)	16 Ga 3"x8" Steel C Beam (Detail L18) MAX POST SPACING (FT)	Attached Structure MIN POST TYPE	Attached Structure FOOTER SIZE "d" (in)	Freestanding or Multispan Units MAX POST LENGTH 8' CONSTRAINED FOOTER "d" (in)	12' CONSTRAINED FOOTER "d" (in)	18' CONSTRAINED FOOTER "d" (in)	Double 12 Ga 3"x8" Steel C Beam (Detail L8) MAX POST SPACING (FT)	Attached Structure MIN POST TYPE	Attached Structure FOOTER SIZE "d" (in)	Freestanding or Multispan Units MAX POST LENGTH 8' CONSTRAINED FOOTER "d" (in)	12' CONSTRAINED FOOTER "d" (in)	18' CONSTRAINED FOOTER "d" (in)
105 MPH EXPOSURE C																					
25	3	9'-7"	A	26'-5"	D	26	32	36	40	17'-1"	C	23	29	32	37	30'-0"	D	28	33	37	41
	3.5	8'-2"	A	25'-1"	D	27	32	35	40	15'-4"	C	23	28	32	36	30'-0"	D	29	33	37	41
	4	7'-2"	A	24'-0"	D	28	31	35	39	13'-10"	C	23	28	31	35	30'-0"	D	30	33	37	41
	4.5	6'-4"	A	23'-0"	D	29	31	35	39	12'-8"	C	24	27	30	35	29'-1"	D	31	33	37	41
	5	5'-9"	A	21'-7"	D	29	31	34	39	11'-9"	C	24	27	30	34	28'-1"	E	32	33	36	41
	5.5	5'-2"	A	20'-3"	D	30	30	34	38	10'-11"	C	24	26	29	34	27'-2"	E	33	33	36	40
	6	4'-9"	A	19'-2"	D	30	30	33	38	10'-1"	C	24	26	29	33	26'-5"	E	33	33	36	40
	6.5	4'-5"	A	18'-2"	D	30	30	33	37	9'-4"	C	24	25	29	33	25'-9"	E	34	34	36	40
	7	4'-1"	A	17'-4"	D	30	30	33	37	8'-8"	C	24	25	28	32	25'-1"	E	34	34	35	40
	7.5	3'-10"	A	16'-7"	D	31	31	32	37	8'-1"	C	24	25	28	32	24'-6"	E	35	35	35	40
	8	3'-7"	A	15'-10"	D	31	31	32	36	7'-7"	C	24	24	27	32	24'-0"	E	35	35	35	39
	8.5	3'-4"	A	15'-2"	D	31	31	32	36	7'-2"	C	24	24	27	31	23'-6"	E	36	36	36	39
	9	3'-2"	A	14'-7"	D	31	31	31	36	6'-9"	C	24	24	27	31	23'-1"	E	36	36	36	39
	9.5	3'-0"	A	14'-1"	D	31	31	31	35	6'-5"	C	24	24	27	31	22'-7"	E	37	37	37	39
110 MPH EXPOSURE C																					
25	3	9'-7"	A	26'-5"	D	27	33	37	41	17'-1"	C	24	30	33	38	30'-0"	D	28	34	38	42
	3.5	8'-2"	A	25'-1"	D	28	33	36	41	15'-4"	C	24	29	32	37	30'-0"	D	30	34	38	42
	4	7'-2"	A	24'-0"	D	29	32	36	40	13'-10"	C	24	28	32	36	30'-0"	D	31	34	38	42
	4.5	6'-4"	A	23'-0"	D	30	32	35	40	12'-8"	C	24	28	31	36	29'-1"	D	32	34	37	42
	5	5'-9"	A	21'-7"	D	30	31	35	39	11'-9"	C	25	27	31	35	28'-1"	E	33	33	37	42
	5.5	5'-2"	A	20'-3"	D	31	31	34	39	10'-11"	C	25	27	30	35	27'-2"	E	34	34	37	41
	6	4'-9"	A	19'-2"	D	31	31	34	39	10'-1"	C	25	26	30	34	26'-5"	E	34	34	37	41
	6.5	4'-5"	A	18'-2"	D	31	31	34	38	9'-4"	C	25	26	29	34	25'-9"	E	35	35	36	41
	7	4'-1"	A	17'-4"	D	31	31	33	38	8'-8"	C	25	26	29	33	25'-1"	E	36	36	36	41
	7.5	3'-10"	A	16'-7"	D	32	32	33	37	8'-1"	C	25	25	28	33	24'-6"	E	36	36	36	41
	8	3'-7"	A	15'-10"	D	32	32	33	37	7'-7"	C	25	25	28	33	24'-0"	E	37	37	37	40
	8.5	3'-4"	A	15'-2"	D	32	32	32	37	7'-2"	C	25	25	28	32	23'-6"	E	37	37	37	40
	9	3'-2"	A	14'-7"	D	32	32	32	37	6'-9"	C	25	25	27	32	23'-1"	E	38	38	38	40
	9.5	3'-0"	A	14'-1"	D	33	33	33	36	6'-5"	C	25	25	27	32	22'-7"	E	38	38	38	40
110 MPH EXPOSURE C																					
30	3	8'-0"	A	24'-10"	D	27	32	36	41	15'-1"	C	23	29	32	37	30'-0"	D	28	34	38	42
	3.5	6'-10"	A	23'-7"	D	28	32	36	40	13'-6"	C	23	28	32	36	29'-9"	D	30	34	38	42
	4	6'-0"	A	22'-3"	D	28	32	35	40	12'-2"	C	23	28	31	35	28'-5"	D	31	33	37	42
	4.5	5'-4"	A	20'-8"	D	29	31	35	39	11'-1"	C	23	27	30	35	27'-4"	E	32	33	37	41
	5	4'-10"	A	19'-4"	D	29	31	34	39	10'-2"	C	24	27	30	34	26'-5"	E	32	33	37	41
	5.5	4'-4"	A	18'-2"	D	29	30	34	38	9'-3"	C	24	26	29	34	25'-7"	E	33	33	36	41
	6	4'-0"	A	17'-1"	D	30	30	33	38	8'-6"	C	24	26	29	33	24'-10"	E	34	34	36	41
	6.5	3'-8"	A	16'-3"	D	30	30	33	37	7'-10"	C	24	25	28	33	24'-2"	E	34	34	36	40
	7	3'-5"	A	15'-5"	D	30	30	32	37	7'-4"	C	24	25	28	32	23'-7"	E	35	35	36	40
	7.5	3'-2"	A	14'-9"	D	30	30	32	37	6'-10"	C	24	24	28	32	23'-1"	E	35	35	35	40
	8	3'-0"	A	14'-1"	D	31	31	32	36	6'-5"	C	24	24	27	32	22'-7"	E	36	36	36	40
	8.5	2'-10"	A	13'-6"	D	31	31	32	36	6'-0"	C	24	24	27	31	21'-4"	E	36	36	36	39
	9	2'-8"	A	12'-11"	E	31	31	31	36	5'-8"	C	24	24	27	31	20'-2"	E	36	36	36	39
105 MPH EXPOSURE C																					
30	3	8'-0"	A	24'-10"	D	26	32	35	40	15'-1"	C	22	28	32	36						
	3.5	6'-10"	A	23'-7"	D	27	31	35	39	13'-6"	C	22	28	31	35						
	4	6'-0"	A	22'-3"	D	27	31	34	39	12'-2"	C	22	27	30	34						
	4.5	5'-4"	A	20'-8"	D	28	30	34	38	11'-1"	C	23	26	30	34						
	5	4'-10"	A	19'-4"	D	28	30	33	38	10'-2"	C	23	26	29	33						
	5.5	4'-4"	A	18'-2"	D	29	29	33	37	9'-3"	C	23	25	29	33						
	6	4'-0"	A	17'-1"	D	29	29	32	37	8'-6"	C	23	25	28	32						
	6.5	3'-8"	A	16'-3"	D	29	29	32	36	7'-10"	C	23	25	28	32						
	7	3'-5"	A	15'-5"	D	29	29	32	36	7'-4"	C	23	24	27	32						
	7.5	3'-2"	A	14'-9"	D	30	30	31	36	6'-10"	C	23	24	27	31						
	8	3'-0"	A	14'-1"	D	30	30	31	35	6'-5"	C	23	24	27	31						
	8.5	2'-10"	A	13'-6"	D	30	30	31	35	6'-0"	C	23	23	26	31						
	9	2'-8"	A	12'-11"	E	30	30	31	35	5'-8"	C	23	23	26	30						

4/27/2009

LATTICE COVER 3.0 POST SPACINGS FOR PATIO AND COMMERCIAL COVERS HIGH WIND AREAS

TABLE 3.5

GROUND SNOW LOAD (PSF)	TRIB WIDTH (FT)	MAX POST SPACING ON SLAB (FT)	POST REQ'D FOR SLAB	12 Ga 3"x8" Steel C Beam (Detail L18) MAX POST SPACING (FT)	Attached Structure MIN POST TYPE	Attached Structure FOOTER SIZE "d" (in)	Freestanding or Multispan Units MAX POST LENGTH 8' CONSTRAINED FOOTER "d" (in)	12' "d" (in)	18' "d" (in)	16 Ga 3"x8" Steel C Beam (Detail L18) MAX POST SPACING (FT)	Attached Structure MIN POST TYPE	Attached Structure FOOTER SIZE "d" (in)	Freestanding or Multispan Units MAX POST LENGTH 8' CONSTRAINED FOOTER "d" (in)	12' "d" (in)	18' "d" (in)	Double 12 Ga 3"x8" Steel C Beam (Detail L8) MAX POST SPACING (FT)	Attached Structure MIN POST TYPE	Attached Structure FOOTER SIZE "d" (in)	Freestanding or Multispan Units MAX POST LENGTH 8' CONSTRAINED FOOTER "d" (in)	12' "d" (in)	18' "d" (in)
110 MPH EXPOSURE C																					
20 LIVE	3	11'-10"	A	26'-10"	C	27	33	37	41	17'-8"	C	24	30	33	38	30'-0"	D	28	34	38	42
	3.5	10'-2"	A	25'-6"	D	28	33	36	41	15'-10"	C	24	29	33	37	30'-0"	D	30	34	38	42
	4	8'-11"	A	24'-5"	D	29	32	36	40	14'-4"	C	25	29	32	36	30'-0"	D	31	34	38	42
	4.5	7'-11"	A	23'-5"	D	30	32	36	40	13'-2"	C	25	28	31	36	29'-7"	D	32	34	38	42
	5	7'-1"	A	22'-2"	D	31	32	35	40	12'-2"	C	25	28	31	35	28'-6"	D	33	34	37	42
	5.5	6'-5"	A	20'-11"	D	31	31	35	39	11'-3"	C	25	27	30	35	27'-8"	D	34	34	37	42
	6	5'-11"	A	19'-9"	D	31	31	34	39	10'-7"	C	25	27	30	34	26'-10"	D	35	35	37	41
	6.5	5'-5"	A	18'-9"	D	32	32	34	38	9'-9"	C	25	26	29	34	26'-2"	D	35	35	37	41
	7	5'-1"	A	17'-10"	D	32	32	34	38	9'-1"	C	25	26	29	34	25'-6"	E	36	36	36	41
	7.5	4'-9"	A	17'-1"	D	32	32	33	38	8'-6"	C	25	26	29	33	24'-11"	E	36	36	36	41
	8	4'-5"	A	16'-4"	D	32	32	33	37	7'-11"	C	25	25	28	33	24'-5"	E	37	37	37	40
	8.5	4'-2"	A	15'-8"	D	32	32	33	37	7'-6"	C	25	25	28	32	23'-11"	E	37	37	37	40
	9	3'-11"	A	15'-1"	D	33	33	33	37	7'-1"	C	25	25	28	32	23'-5"	E	38	38	38	40
	9.5	3'-9"	A	14'-6"	D	33	33	33	36	6'-8"	C	25	25	27	32	23'-0"	E	38	38	38	40
	10	3'-6"	A	14'-0"	D	33	33	33	36	6'-4"	C	25	25	27	32	22'-6"	E	39	39	39	40
	11	3'-2"	A	13'-2"	D	33	33	33	36	5'-10"	C	25	25	27	31	20'-7"	E	39	39	39	39
120 MPH EXPOSURE C																					
20 LIVE	3	11'-10"	A	26'-10"	C	29	35	38	43	17'-8"	C	25	31	35	40	30'-0"	D	30	35	39	44
	3.5	10'-2"	A	25'-6"	D	30	34	38	43	15'-10"	C	26	31	34	39	30'-0"	D	32	35	39	44
	4	8'-11"	A	24'-5"	D	31	34	38	42	14'-4"	C	26	30	33	38	30'-0"	D	33	35	39	44
	4.5	7'-11"	A	23'-5"	D	32	33	37	42	13'-2"	C	26	29	33	37	29'-7"	D	34	35	39	44
	5	7'-1"	A	22'-2"	D	32	33	37	41	12'-2"	C	27	29	32	37	28'-6"	D	35	35	39	44
	5.5	6'-5"	A	20'-11"	D	33	33	36	41	11'-3"	C	27	28	32	36	27'-8"	D	36	36	39	43
	6	5'-11"	A	19'-9"	D	33	33	36	40	10'-7"	C	27	28	31	36	26'-10"	D	37	37	38	43
	6.5	5'-5"	A	18'-9"	D	33	33	35	40	9'-9"	C	27	27	31	35	26'-2"	D	37	37	38	43
	7	5'-1"	A	17'-10"	D	34	34	35	40	9'-1"	C	27	27	30	35	25'-6"	E	38	38	38	43
	7.5	4'-9"	A	17'-1"	D	34	34	35	39	8'-6"	C	27	27	30	35	24'-11"	E	39	39	39	42
	8	4'-5"	A	16'-4"	D	34	34	34	39	7'-11"	C	27	27	30	34	24'-5"	E	39	39	39	42
	8.5	4'-2"	A	15'-8"	D	34	34	34	39	7'-6"	C	27	27	29	34	23'-11"	E	40	40	40	42
	9	3'-11"	A	15'-1"	D	35	35	35	38	7'-1"	C	27	27	29	34	23'-5"	E	40	40	40	42
	9.5	3'-9"	A	14'-6"	D	35	35	35	38	6'-8"	C	27	27	29	33	23'-0"	E	41	41	41	42
130 MPH EXPOSURE C																					
20 LIVE	3	11'-10"	A	26'-10"	C	31	36	40	45	17'-8"	C	27	33	36	41	30'-0"	D	32	37	41	46
	3.5	10'-2"	A	25'-6"	D	32	36	39	44	15'-10"	C	27	32	36	40	30'-0"	D	34	37	41	46
	4	8'-11"	A	24'-5"	D	33	35	39	44	14'-4"	C	27	31	35	40	30'-0"	D	35	37	41	46
	4.5	7'-11"	A	23'-5"	D	34	35	39	44	13'-2"	C	28	31	34	39	29'-7"	D	36	37	41	46
	5	7'-1"	A	22'-2"	D	34	34	38	43	12'-2"	C	28	30	34	38	28'-6"	D	37	37	41	46
	5.5	6'-5"	A	20'-11"	D	35	35	38	43	11'-3"	C	28	30	33	38	27'-8"	D	38	38	40	45
	6	5'-11"	A	19'-9"	D	35	35	37	42	10'-7"	C	28	29	33	37	26'-10"	D	39	39	40	45
	6.5	5'-5"	A	18'-9"	D	35	35	37	42	9'-9"	C	28	29	32	37	26'-2"	D	39	39	40	45
	7	5'-1"	A	17'-10"	D	36	36	36	41	9'-1"	C	28	28	32	36	25'-6"	E	40	40	40	44
	7.5	4'-9"	A	17'-1"	D	36	36	36	41	8'-6"	C	28	28	31	36	24'-11"	E	41	41	41	44
	8	4'-5"	A	16'-4"	D	36	36	36	41	7'-11"	C	28	28	31	36	24'-5"	E	41	41	41	44
	8.5	4'-2"	A	15'-8"	D	36	36	36	40	7'-6"	C	28	28	30	35	23'-11"	E	42	42	42	44
	9	3'-11"	A	15'-1"	D	37	37	37	40	7'-1"	C	28	28	30	35	23'-5"	E	42	42	42	44
	9.5	3'-9"	A	14'-6"	D	37	37	37	40	6'-8"	C	28	28	30	35	23'-0"	E	43	43	43	44
	10	3'-6"	A	14'-0"	D	37	37	37	39	6'-4"	C	28	28	30	34	22'-6"	E	43	43	43	43

TABLE 3.5

GROUND SNOW LOAD (PSF)	TRIB WIDTH (FT)	MAX POST SPACING ON SLAB (FT)	POST REQ'D FOR SLAB	12 Ga 3"x8" Steel C Beam (Detail L18) MAX POST SPACING (FT)	Attached Structure MIN POST TYPE	Attached Structure FOOTER SIZE "d" (in)	Freestanding or Multispan Units MAX POST LENGTH 8' CONSTRAINED FOOTER "d" (in)	12' "d" (in)	18' "d" (in)	16 Ga 3"x8" Steel C Beam (Detail L18) MAX POST SPACING (FT)	Attached Structure MIN POST TYPE	Attached Structure FOOTER SIZE "d" (in)	Freestanding or Multispan Units MAX POST LENGTH 8' CONSTRAINED FOOTER "d" (in)	12' "d" (in)	18' "d" (in)	Double 12 Ga 3"x8" Steel C Beam (Detail L8) MAX POST SPACING (FT)	Attached Structure MIN POST TYPE	Attached Structure FOOTER SIZE "d" (in)	Freestanding or Multispan Units MAX POST LENGTH 8' CONSTRAINED FOOTER "d" (in)	12' "d" (in)	18' "d" (in)
110 MPH EXPOSURE C																					
40	3	6'-1"	A	22'-5"	D	26	32	35	40	12'-3"	C	21	28	31	35	28'-5"	D	28	33	37	42
	3.5	5'-2"	A	20'-4"	D	26	31	34	39	10'-11"	C	21	27	30	35	27'-0"	E	29	33	37	41
	4	4'-6"	A	18'-8"	D	27	30	34	38	9'-8"	C	22	26	29	34	25'-10"	E	30	33	36	41
	4.5	4'-0"	A	17'-3"	D	27	30	33	38	8'-7"	C	22	26	29	33	24'-10"	E	31	32	36	41
	5	3'-7"	A	16'-1"	D	27	29	33	37	7'-9"	C	22	25	28	33	24'-0"	E	31	32	36	40
	5.5	3'-3"	A	15'-1"	D	28	29	32	37	7'-1"	C	22	25	28	32	23'-3"	E	32	32	36	40
	6	3'-0"	A	14'-2"	D	28	29	32	36	6'-6"	C	22	24	27	32	22'-7"	E	33	33	35	40
	6.5	2'-9"	A	13'-5"	D	28	28	32	36	6'-0"	C	22	24	27	31	21'-2"	E	33	33	35	39
	7	2'-7"	A	12'-9"	E	28	28	31	36	5'-7"	C	22	23	27	31	19'-8"	E	33	33	34	39
	7.5	2'-5"	A	12'-1"	E	29	29	31	35	5'-2"	C	22	23	26	31	18'-5"	E	33	33	34	38
	8	2'-3"	A	11'-7"	E	29	29	31	35	4'-10"	C	22	23	26	31	17'-4"	E	33	33	33	38
	8.5	2'-1"	A	11'-1"	E	29	29	30	35	4'-7"	C	22	23	26	30	16'-4"	E	33	33	33	37
110 MPH EXPOSURE C																					
60	3	4'-1"	A	17'-5"	D	24	30	33	38	8'-8"	C	19	26	29	33	24'-10"	E	27	32	36	41
	3.5	3'-6"	A	15'-8"	D	24	29	33	37	7'-6"	C	19	25	28	32	23'-7"	E	28	32	36	40
	4	3'-0"	A	14'-4"	D	24	29	32	36	6'-7"	C	19	24	27	32	22'-7"	E	29	32	35	40
	4.5	2'-8"	A	13'-2"	E	25	28	31	36	5'-10"	C	19	24	27	31	20'-8"	E	29	31	35	39
	5	2'-5"	A	12'-3"	E	25	28	31	35	5'-3"	C	19	23	26	31	18'-8"	E	29	30	34	38
	5.5	2'-2"	A	11'-5"	E	25	27	30	35	4'-9"	C	19	23	26	30	17'-0"	E	29	30	33	38
	6	2'-0"	A	10'-8"	E	25	27	30	34	4'-4"	C	19	22	25	30	15'-7"	E	29	29	33	37
	6.5	1'-10"	A	10'-1"	E	26	26	30	34	4'-0"	C	19	22	25	30	14'-5"	E	29	29	32	36
	7	1'-9"	A	9'-7"	E	26	26	29	34	3'-9"	C	19	22	25	30	13'-5"	E	29	29	32	36

TABLE 3.2 TRIBUTARY WIDTHS FOR SINGLE SPAN ATTACHED STRUCTURES

OVER-HANG (FT)	PROJECTION OF SINGLE SPAN STUCTURES (FT) 8'	9'	10'	11'	12'	13'	14'	15'	16'	17'	18'	19'	20'	21'	22'
0'	4'	4.5'	5'	5.5'	6'	6.5'	7'	7.5'	8'	8.5'	9'	9.5'	10'	10.5'	11'
1'	4.5'	5'	5.5'	6'	6.5'	7'	7.5'	8'	8.5'	9'	9.5'	10'	10.5'	11'	11.5'
2'	5'	5.5'	6'	6.5'	7'	7.5'	8'	8.5'	9'	9.5'	10'	10.5'	11'	11.5'	12'
3'	5.5'	6'	6.5'	7'	7.5'	8'	8.5'	9'	9.5'	10'	10.5'	11'	11.5'	12'	12.5'
4'	6'	6.5'	7'	7.5'	8'	8.5'	9'	9.5'	10'	10.5'	11'	11.5'	12'	12.5'	13'
5'	6.5'	7'	7.5'	8'	8.5'	9'	9.5'	10'	10.5'	11'	11.5'	12'	12.5'	13'	13.5'

TABLE 3.3 Post Requirements for Attached Structures

Post Description	Max Hgt	POST
Twin 0.062"x1.5"x1.5" ScrolL	9'	A
0.042"x3"x8" Aluminum Post	11'	B
0.024"Post with Sideplates	12'	B
Clover 0.032"x3"x3" Alum	12'	B
Clover 0.040"x3"x3" Alum	12'	B
Colonial 0.062" Extruded	12'	C
0.041"x3"x3" Steel Clover	12'	D
0.041"x3"x3" Steel Clover	8'	E
3/16"x3"x3" Steel Square	15'	F
3/16"x4"x4" Steel Square	18'	G
5/16"x4"x4" Steel Square	18'	H

TABLE 3.4 Post Requirements for Freestanding Structures

Post Description	Maximum Footing	Max Height	POST
0.041"x3"x3" Steel Clover	d = 23"	12'	D
0.041"x3"x3" Steel Clover	d = 23"	8'	E
3/16"x3"x3" Steel Square	d = 32"	15'	F
3/16"x4"x4" Steel Square	d = 38"	18'	G
5/16"x4"x4" Steel Square	d = 42"	18'	H

GENERAL INSTRUCTIONS FOR THESE TABLES

1. CHOOSE FREESTANDING OR ATTACHED STRUCTURE
2. CHOOSE PROJECTION, WIDTH AND OVERHANG OF UNIT
3. DETERMINE WIND AND LIVE OR SNOW LOAD OF STRUCTURE SITE (PATIO UNITS USE 10 PSF MIN, COMMERCIAL UNITS USE 20PSF MIN)
4. CHOOSE A RAFTER FROM TABLES 1.1 TO 1.8 THAT HAS ADEQUATE CLEARSPAN FOR YOUR NEEDS.
5. DETERMINE TRIBUTARY WIDTH FROM TABLE 3.2 OR CALCULATE FROM TRIBUTARY DIAGRAM ON **SC02 PAGE 2 OF 2**
6. CHOOSE A HEADER FROM TABLE 3.5 THAT HAS ADEQUATE POST SPACING.
7. USE THE APPROPRIATE FOOTER SIZE SHOWN.
8. FOR SINGLE SPAN ATTACHED UNIT USE THE POST SHOWN UPGRADE THE POST IF THE HEIGHT IS NOT SUFFICIENT FREESTANDING AND MULTISPAN UNITS USE TABLE 3.4
9. FIND THE O/C SPACING OR # OF FASTENERS FOR ATTACHING TO WALL FROM TABLE 7.6
10. USE THE APPROPRIATE DETAILS
11. ALL LATTICE **NOT** USING **DETAIL L29** MUST COMPLY WITH TABLES **L1** AND **L2** ON SHEET **M5**

FOR PATIO SLABS FOLLOW 1-6 FROM ABOVE THEN

SLAB 7. DETERMINE MAXIMUM POST SPACING ON SLAB FROM TABLE 3.5
SLAB 8. USE THE SMALLER OF THE POST SPACING ON SLAB OR HEADER POST SPACING
SLAB 9. FOLLOW **9-11** FROM ABOVE
SLAB 10. FOR **TWO** POST STRUCTURES USE **TABLE 7.1** ON SHEET **M3** FOR SLAB REQUIREMENTS INSTEAD OF THESE TABLES
SLAB11. CHECK TABLES **SLAB1** AND **SLAB2** ON **M5** FOR CORNER DISTANCE REQUIRMENTS.

Amerimax Building Products
5208 Tennyson Parkway
Plano, Texas 75024

Carl Putnam, P. E.
3441 Ivylink Place
Lynchburg, VA 24503
carlputnam@comcast.net

REGISTERED PROFESSIONAL ENGINEER
CARL PUTNAM
C 68139
EXP. 6/30/2009
CIVIL
STATE OF CALIFORNIA

4/27/2009

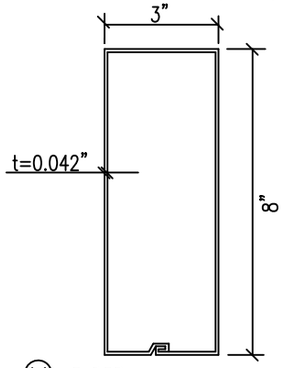

L1 HEADER
(3004–H36 ALUM. ALLOY)

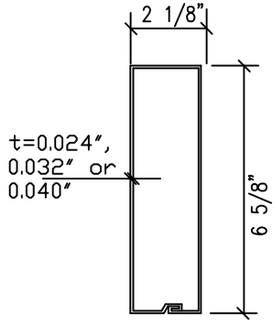

L2 RAFTER & SIDEPLATES
(3004–H36 ALUM. ALLOY)

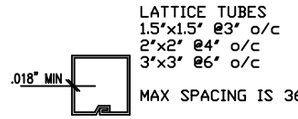

LATTICE TUBES
1.5"x1.5" @3' o/c
2"x2" @4' o/c
3"x3" @6' o/c

MAX SPACING IS 36' O/C

L3 LATTICE
(3105–H26 ALUM. ALLOY)

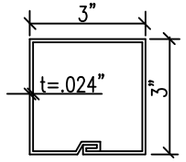

L4 POST
(3105–H26 ALUM. ALLOY)

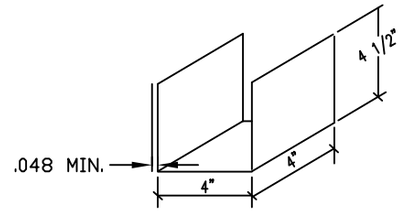

ASTM A–653 Fy=40 KSI
L5 STEEL CONNECTOR FOR WOOD POST CONNECTION

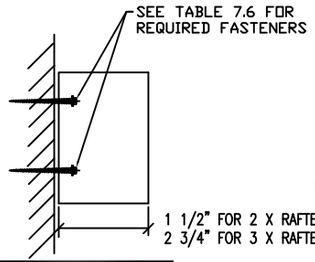

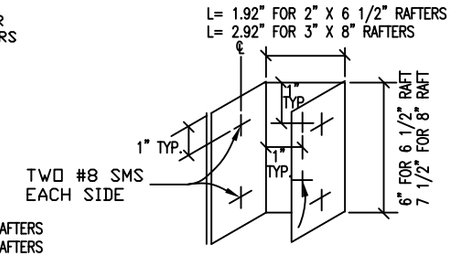

(6063–T6 ALUM. ALLOY, 'T'= 0.060")
L7 RAFTER HANGER

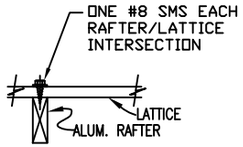

L6 LATTICE TO RAFTER CONN.

L8 1/4" BOLTS ASTM A307 OR #14 SELF DRILLING SCREWS SEE BELOW FOR QTY

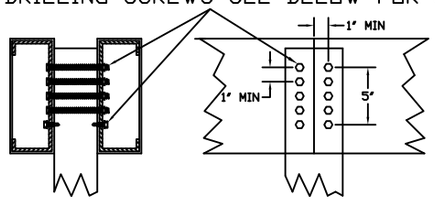

DOUBLE OR SINGLE 3"X8" STEEL C BEAM. BOLT LAYOUT FOR SPLICED AND NON-SPLICE ATTACHMENT

UP TO 25 PSF USE FOUR BOLTS
30 PSF USE 6 BOLTS OR 12 SCREWS
40+ PSF USE 10 BOLTS

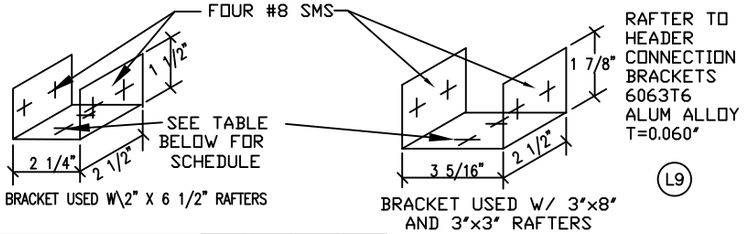

L9

Wind Speed	t (in)	Header	Allowable Trib Width No. of #8 Screws 2	3	4	5
90 MPH	0.032	Double 2x6	12'	15'	15'	15'
Exp C	0.042	0.042"x3"x8"	8'	12'	15'	15'
	0.042	Double 3x8	15'	15'	15'	15'
110MPH	0.032	Double 2x6	8'	12'	15'	15'
Exp C	0.042	0.042"x3"x8"	5'	8'	10'	15'
	0.042	Double 3x8	10'	15'	15'	15'
			No. of #14 Screws			
130MPH	0.032	Double 2x6	7'	11'	15'	15'
Exp C	0.042	0.042"x3"x8"	5'	7'	10'	13'
	0.042	Double 3x8	10'	15'	15'	15'

USE TWO #14 SMS WHEN ATTACHING TO STEEL C BEAMS. 130 MPH REQUIRES THREE #14SCREWS FOR TRIB WIDTHS OVER 10'

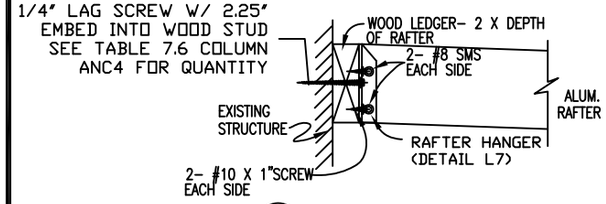

L10 ALTERNATE RAFTER TO WALL CONN.

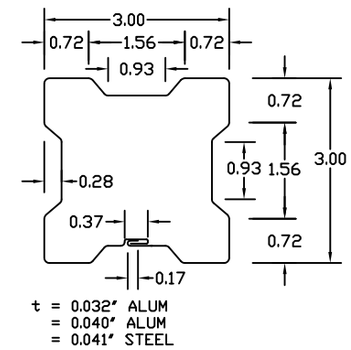

t = 0.032" ALUM
= 0.040" ALUM
= 0.041" STEEL

L11 3" ALTERNATE POST
(3004 H36 ALUM. ALLOY OR
A–653 Fy=40 KSI STEEL)

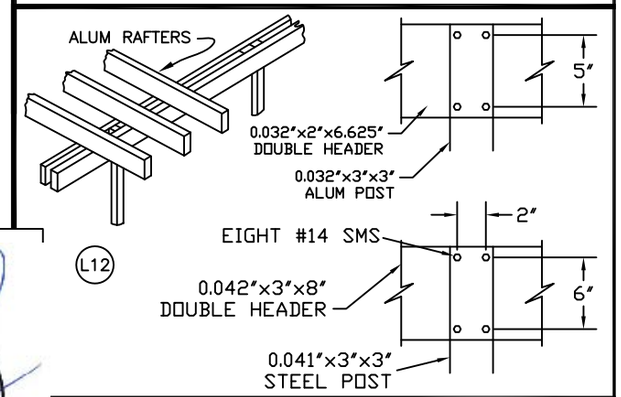

L12

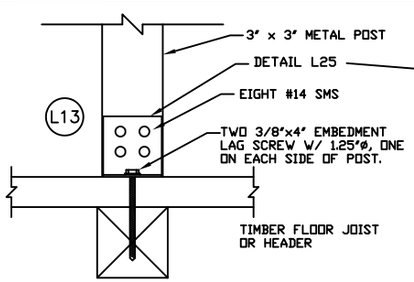

L13

ATTACHED STRUCTURE POST
TO DECK FLOOR JOIST

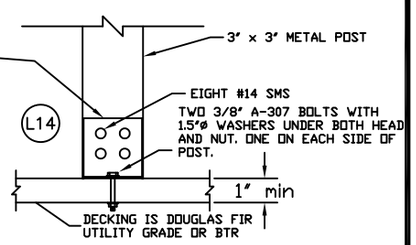

L14

ATTACHED STRUCTURE POST
TO DECKING

SEE GENERAL NOTE #19 AND
LATTICE NOTE #3
UNITS MUST COMPY WITH TABLES
L1 AND L2 ON SHEET M5

THESE DETAILS ARE
LIMITED TO 90 mph
EXPOSURE B AND C

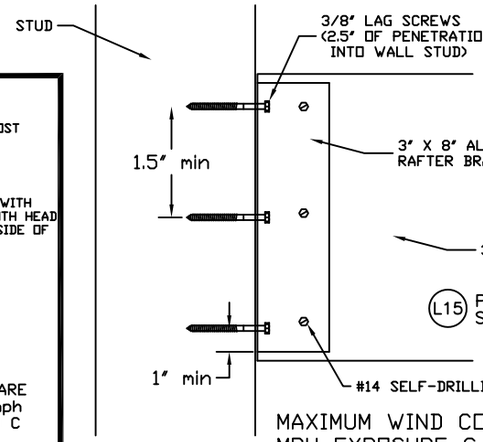

L15 POST ALTERNATIVE FOR
SLAB ATTACHMENT ONLY

MAXIMUM WIND CONDITION IS 105
MPH EXPOSURE C

4/27/2009
Engineer's Stamp

Amerimax BUILDING PRODUCTS, INC.
5208 TENNYSON PARKWAY
SUITE 100
PLANO, TEXAS 75024

DRAWN BY: BEJ/CP	TYPE:	
SCALE: NTS	Component Parts & Connection Details For Patio & Commercial Lattice Structures	
DATE:	FILE#: LT01–2006	SHEET: 1 of 3

ALTERNATE 3" SQ POST CONNECTOR BRACKET (6063T6 ALUM) IF DETAIL L29 IS NOT USED ATTACH SIDE PLATES AS PER DETAIL L26

L16

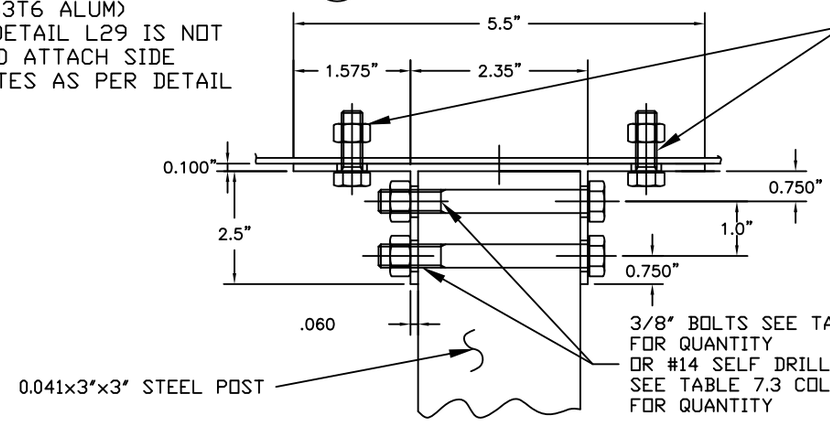

3/8" BOLTS W/ 1" DIA. x 3/32" THK. STL. WASHER TO 8" STEEL "C" BEAM SEE TABLE 7.4 COLUMN "N" FOR QUANTITY FOR #14 SELF DRILLING SCREWS SEE TABLE 7.4 COLUMN "O".

3/8" BOLTS SEE TABLE 7.3 COLUMN "H" FOR QUANTITY OR #14 SELF DRILLING SCREWS SEE TABLE 7.3 COLUMN "G" FOR QUANTITY

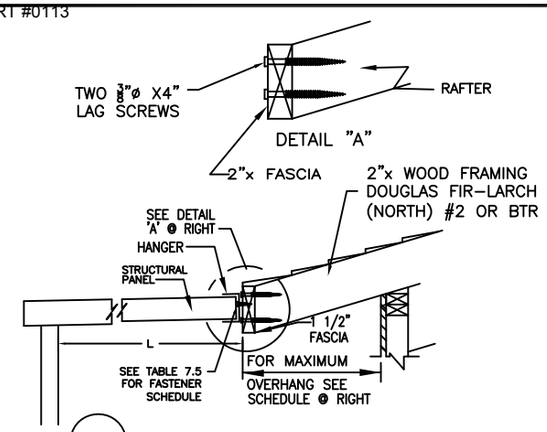

L17 ALTERNATE EAVE ATTACHMENT

Live/Snow Load	RAFTER	MAX DISTANCE TO FIRST ROW OF POSTS "L"				
Solid Cover Wind	SIZE	EAVE OVERHANG				
	(24" O/C)	12"	18"	24"	30"	36"
10 psf	2x4	15'-8"	8'-11"	5'-6"	2'-6"	0'-2"
90 MPH Exp B	2x6	22'-0'	22'-0'	17'-4"	13'-8"	9'-6"
	2x8	22'-0'	22'-0'	22'-0'	22'-0'	22'-0'
10 psf	2x4	11'-2"	6'-7"	4'-1"	2'-4"	0'-2"
90 MPH Exp C	2x6	22'-0'	22'-0'	15'-1"	10'-1"	7'-2"
	2x8	22'-0'	22'-0'	22'-0'	22'-0'	22'-0'
20 psf	2x4	8'-6"	4'-9"	2'-8"	1'-3"	0'-1"
105 MPH Exp B	2x6	12'-4'	12'-4'	9'-8"	6'-10"	4'-9"
	2x8	12'-4'	12'-4'	12'-4'	12'-4'	11'-6"
25 psf	2x4	6'-9"	3'-9"	2'-1"	0'-10"	0'-0"
105 MPH Exp C	2x6	13'-7'	11'-3"	7'-8"	5'-4"	3'-8"
	2x8	13'-7'	13'-7'	13'-7'	11'-10"	9'-1"
30 psf	2x4	5'-6"	3'-0"	1'-6"	0'-4"	0'-0"
110 MPH Exp C	2x6	11'-1"	9'-2"	6'-1"	4'-1"	2'-8"
	2x8	11'-4'	11'-4'	11'-4'	9'-6"	7'-1"
40 psf	2x4	3'-10"	1'-10"	0'-8"	0'-0"	0'-0"
	2x6	7'-10"	6'-7"	4'-2"	2'-7"	1'-4"
	2x8	8'-4'	8'-4'	8'-4'	6'-7"	4'-8"
60 psf	2x4	2'-3"	0'-10"	0'-0"	0'-0"	0'-0"
	2x6	4'-8"	3'-10"	2'-2"	1'-0"	0'-1"
	2x8	5'-9'	5'-9'	5'-3"	3'-8"	5'-9'

DETAIL 3" X 8" – 1 FOR ATTACHED STRUCTURES POST TO WRAPPED 3" X 8" X 12 or 16 GA. 'C' BEAM HEADER CONNECTIONS

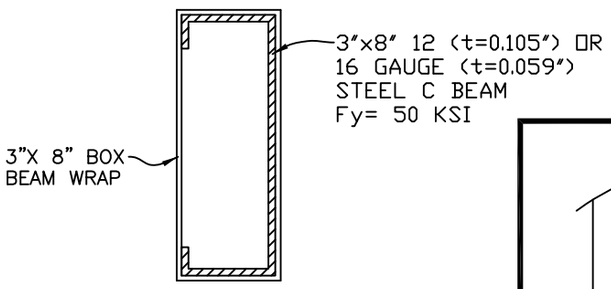

L18 3" X 8" X 12, 16 GA. STL. 'C' BEAM WRAP W/ 3" X 8" ALUM. BOX BEAM

L19 HEADER SPLICE DETAIL

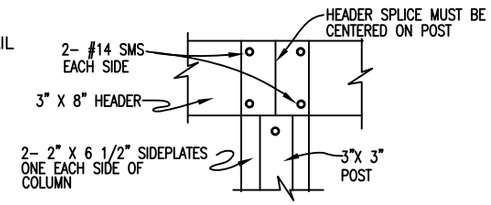

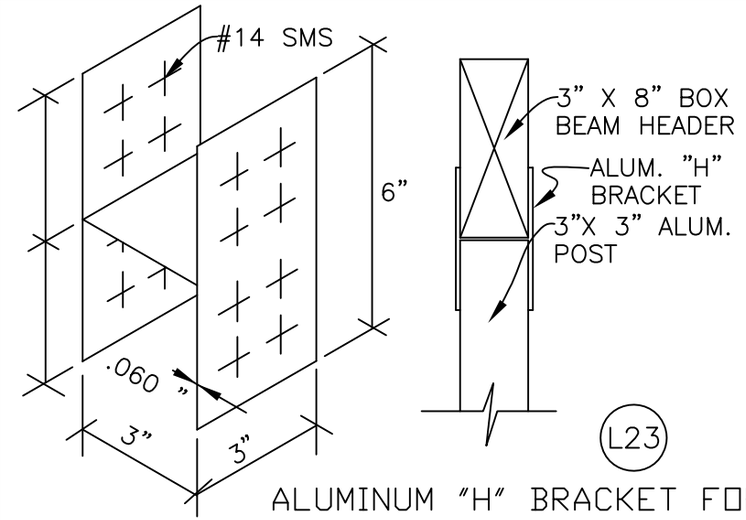

L23

ALUMINUM "H" BRACKET FOR CONNECTING POST TO HEADER (6063T6 ALUM ALLOY) THIS DETAIL MAY ONLY BE USED WITH DETAIL L29

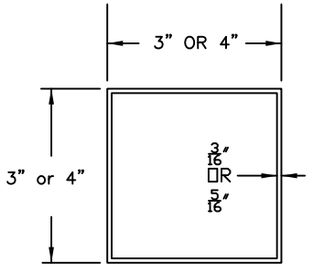

L21 3" OR 4" ASTM A500 GRADE A STEEL POST

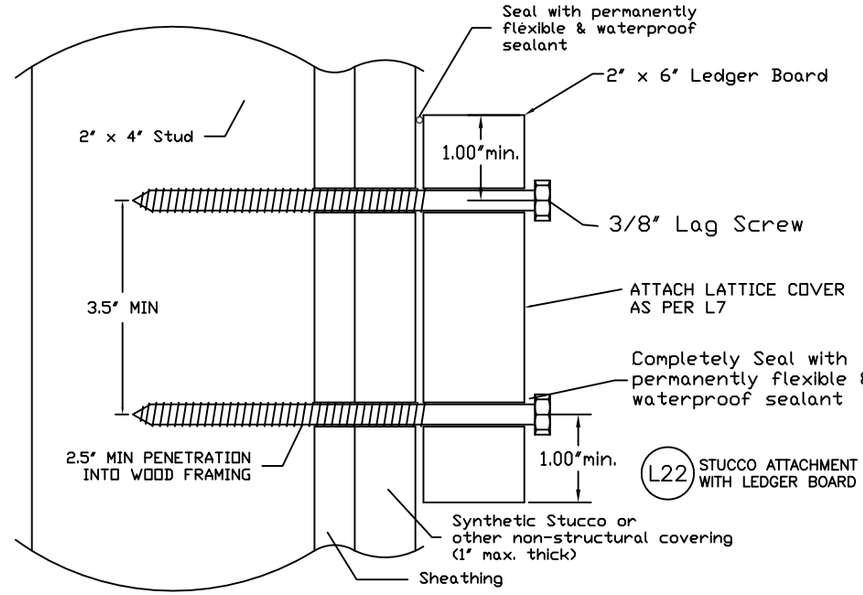

L22 STUCCO ATTACHMENT DETAIL WITH LEDGER BOARD

SEE ALLOWABLE DISTANCE TO FIRST ROW OF POSTS IN TABLE 7.7

4/27/2009

Engineer's Stamp

Amerimax BUILDING PRODUCTS, INC.
5208 TENNYSON PARKWAY
SUITE 100
PLANO, TEXAS 75024

DRAWN BY: BEJ/CP	TYPE:	
SCALE: NTS	Component Parts & Connection Details For Patio & Commercial Lattice Structures	
DATE:	FILE#: LT02-2006	SHEET: 2 of 3

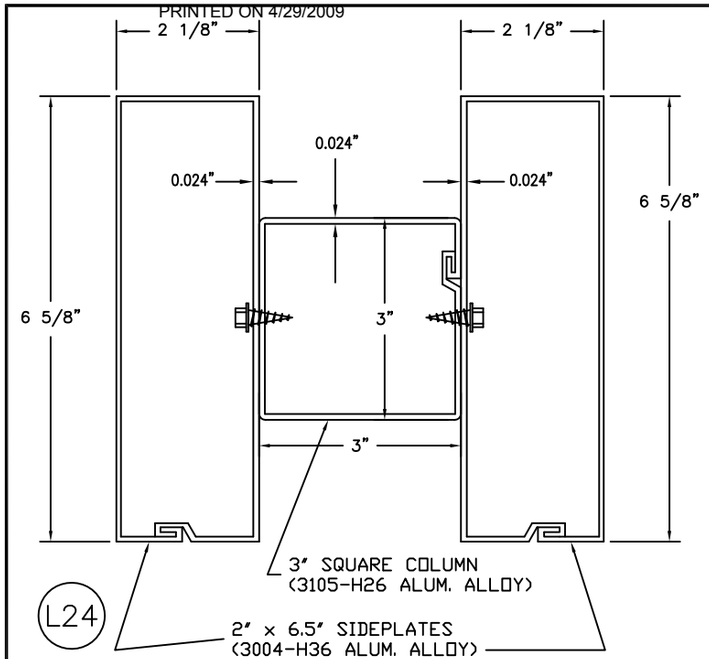

L24

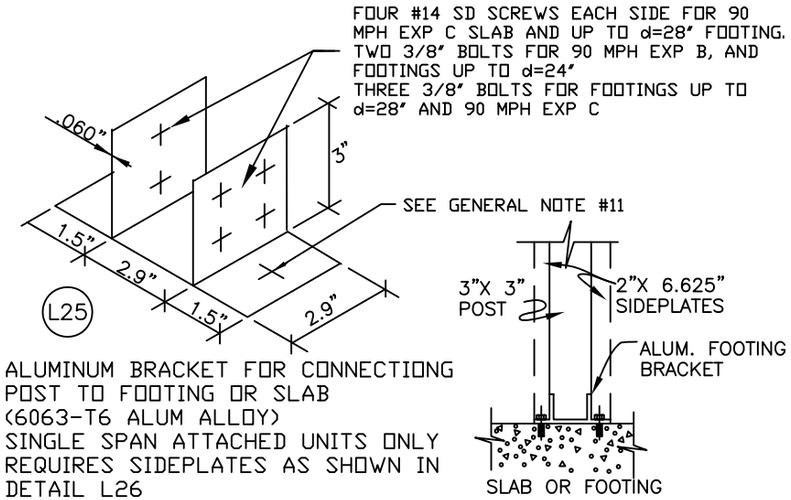

L25

ALUMINUM BRACKET FOR CONNECTIONG POST TO FOOTING OR SLAB (6063-T6 ALUM ALLOY)
SINGLE SPAN ATTACHED UNITS ONLY REQUIRES SIDEPLATES AS SHOWN IN DETAIL L26

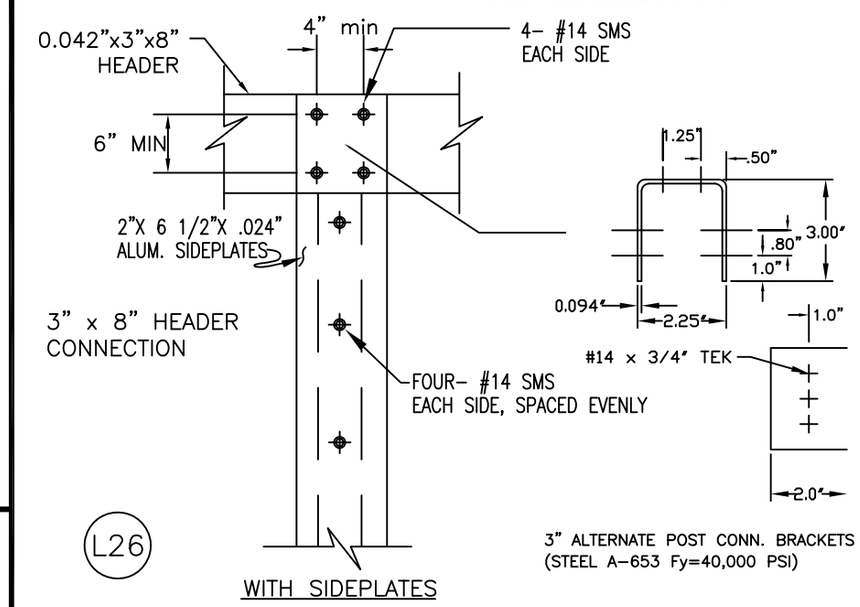

L26

WITH SIDEPLATES

L30

ALTERNATE 3"X3" RAFTER ATTACHMENT

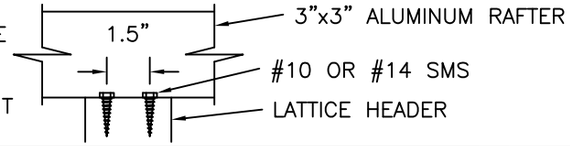

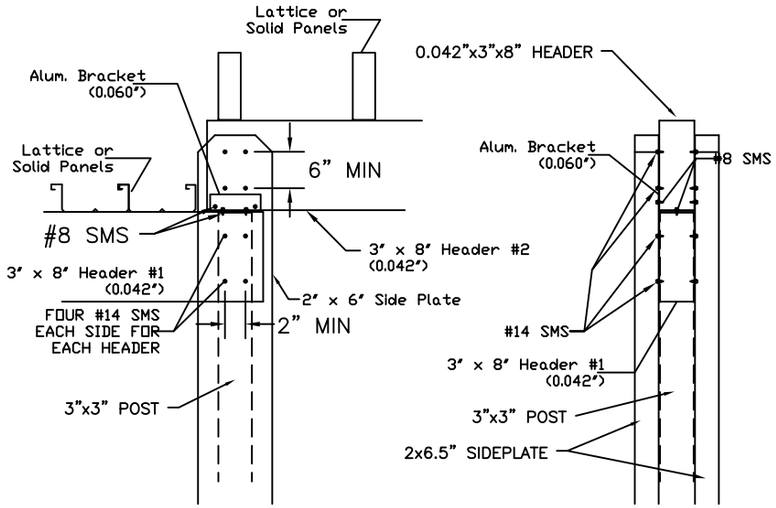

L27 ALTERNATIVE SPLICE FOR ATTACHED UNITS

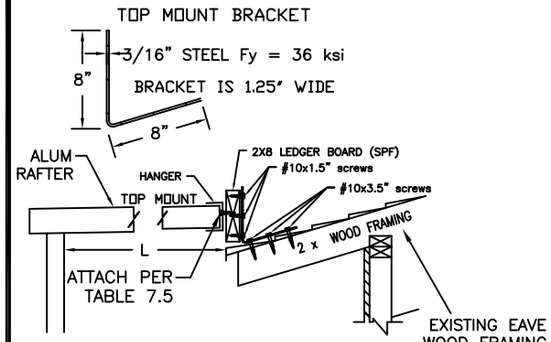

ALL HOUSE PENETRATIONS MUST BE COMPLETELY AND PERMANENTLY SEALED

MAX "L" FOR TOP OR SIDE MOUNT		
	TRUSS/RAFTER	
Live	O/C SPACING	
Load	16" o/c	24"o/c
10	21'-6"	14'-4"
20	11'-3"	7'-6"

NOT ALLOWED IN SNOW LOAD AREAS.

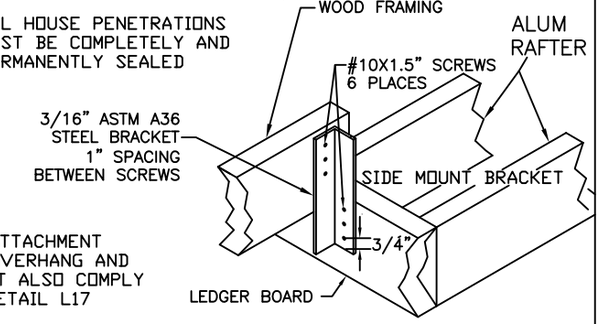

L28

EAVE ATTACHMENT
EAVE OVERHANG AND 'L' MUST ALSO COMPLY WITH DETAIL L17

FREESTANDING OR ATTACHED FOOTING TO POST CONNECTION DETAIL

L29

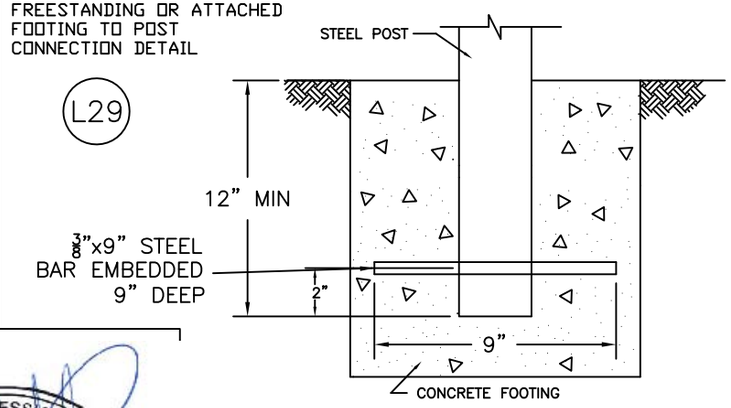

CONSTRAINED FOOTINGS REQUIRE A 3.5" CONCRETE SURFACE SLAB

4/27/2009
Engineer's Stamp

Amerimax BUILDING PRODUCTS, INC.
5208 TENNYSON PARKWAY
SUITE 100
PLANO, TEXAS 75024

DRAWN BY: BEJ/CP	TYPE:	
SCALE: NTS	Component Parts & Connection Details For Patio & Commercial Lattice Structures	
DATE:	FILE#: LT03-2006	SHEET: 3 of 3

SOLID COVERS 4.0 PANEL SPANS FOR COMMERCIAL AND PATIO STRUCTURES

2.5" x6" Super Six (Multispan)

Ground Snow Load (psf)	Panel Gauge (in)	Wind Speed and Exposure Exp B 90	Exposure C 90	Exposure C 105	Exposure C 110
10 LIVE	0.018	11'-1"	10'-11"	9'-4"	8'-11"
	0.024	13'-7"	13'-7"	11'-7"	11'-1"
	0.032	17'-1"	17'-1"	14'-7"	13'-11"
	0.036	18'-8"	18'-8"	16'-1"	15'-4"
20 LIVE	0.018	7'-11"	7'-11"	7'-11"	7'-11"
	0.024	9'-10"	9'-10"	9'-10"	9'-10"
	0.032	12'-4"	12'-4"	12'-4"	12'-4"
	0.036	13'-7"	13'-7"	13'-7"	13'-7"
25	0.018	7'-8"	7'-8"	7'-8"	7'-8"
	0.024	9'-7"	9'-7"	9'-7"	9'-7"
	0.032	12'-1"	12'-1"	12'-1"	12'-1"
	0.036	13'-3"	13'-3"	13'-3"	13'-3"
30	0.018	7'-0"	7'-0"	7'-0"	7'-0"
	0.024	8'-9"	8'-9"	8'-9"	8'-9"
	0.032	11'-0"	11'-0"	11'-0"	11'-0"
	0.036	12'-2"	12'-2"	12'-2"	12'-2"
40	0.018	6'-1"	6'-1"	6'-1"	6'-1"
	0.024	7'-7"	7'-7"	7'-7"	7'-7"
	0.032	9'-7"	9'-7"	9'-7"	9'-7"
	0.036	10'-7"	10'-7"	10'-7"	10'-7"
60	0.018	4'-11"	4'-11"	4'-11"	4'-11"
	0.024	6'-3"	6'-3"	6'-3"	6'-3"
	0.032	7'-10"	7'-10"	7'-10"	7'-10"
	0.036	8'-8"	8'-8"	8'-8"	8'-8"

TABLE 4.1

3.5"x12" Super 12 (Multispan)

Ground Snow Load (psf)	Panel Gauge (in)	Wind Speed and Exposure Exp B 90	Exposure C 90	Exposure C 105	Exposure C 110
10 LIVE	0.018	9'-5"	8'-3"	6'-4"	5'-10"
	0.024	14'-2"	13'-8"	11'-3"	10'-7"
	0.032	19'-6"	19'-6"	16'-7"	15'-9"
	0.036	20'-10"	20'-10"	18'-9"	17'-11"
20 LIVE	0.018	5'-9"	5'-9"	5'-9"	5'-9"
	0.024	9'-7"	9'-7"	9'-7"	9'-7"
	0.032	13'-9"	13'-9"	13'-9"	13'-9"
	0.036	15'-6"	15'-6"	15'-6"	15'-6"
25	0.018	5'-6"	5'-6"	5'-6"	5'-6"
	0.024	9'-4"	9'-4"	9'-4"	9'-4"
	0.032	13'-5"	13'-5"	13'-5"	13'-5"
	0.036	15'-2"	15'-2"	15'-2"	15'-2"
30	0.018	4'-9"	4'-9"	4'-9"	4'-9"
	0.024	8'-4"	8'-4"	8'-4"	8'-4"
	0.032	12'-2"	12'-2"	12'-2"	12'-2"
	0.036	13'-9"	13'-9"	13'-9"	13'-9"
40	0.018	3'-9"	3'-9"	3'-9"	3'-9"
	0.024	6'-11"	6'-11"	6'-11"	6'-11"
	0.032	10'-5"	10'-5"	10'-5"	10'-5"
	0.036	11'-10"	11'-10"	11'-10"	11'-10"
60	0.018	2'-7"	2'-7"	2'-7"	2'-7"
	0.024	5'-2"	5'-2"	5'-2"	5'-2"
	0.032	8'-4"	8'-4"	8'-4"	8'-4"
	0.036	9'-6"	9'-6"	9'-6"	9'-6"

TABLE 4.2

2.5" x 12" Mark X (Multispan)

Ground Snow Load (psf)	Panel Gauge (in)	Wind Speed and Exposure Exp B 90	Exposure C 90	Exposure C 105	Exposure C 110
10 LIVE	0.018	8'-1"	8'-1"	7'-7"	7'-3"
	0.024	11'-3"	11'-3"	10'-2"	9'-8"
	0.032	15'-4"	15'-4"	13'-7"	12'-11"
	0.036	16'-0"	16'-0"	14'-6"	14'-0"
20 LIVE	0.018	5'-4"	5'-4"	5'-4"	5'-4"
	0.024	7'-7"	7'-7"	7'-7"	7'-7"
	0.032	10'-7"	10'-7"	10'-7"	10'-7"
	0.036	12'-1"	12'-1"	12'-1"	12'-1"
25	0.018	5'-2"	5'-2"	5'-2"	5'-2"
	0.024	7'-4"	7'-4"	7'-4"	7'-4"
	0.032	10'-4"	10'-4"	10'-4"	10'-4"
	0.036	11'-9"	11'-9"	11'-9"	11'-9"
30	0.018	4'-7"	4'-7"	4'-7"	4'-7"
	0.024	6'-7"	6'-7"	6'-7"	6'-7"
	0.032	9'-4"	9'-4"	9'-4"	9'-4"
	0.036	10'-8"	10'-8"	10'-8"	10'-8"
40	0.018	3'-9"	3'-9"	3'-9"	3'-9"
	0.024	5'-6"	5'-6"	5'-6"	5'-6"
	0.032	7'-10"	7'-10"	7'-10"	7'-10"
	0.036	9'-0"	9'-0"	9'-0"	9'-0"
60	0.018	2'-9"	2'-9"	2'-9"	2'-9"
	0.024	4'-2"	4'-2"	4'-2"	4'-2"
	0.032	6'-2"	6'-2"	6'-2"	6'-2"
	0.036	7'-1"	7'-1"	7'-1"	7'-1"

TABLE 4.3

2"x6" Flat Panel (Multispan)

Ground Snow Load (psf)	Panel Gauge (in)	Wind Speed and Exposure Exp B 90	Exposure C 90	Exposure C 105	Exposure C 110
10 LIVE	0.018	11'-7"	11'-7"	9'-10"	9'-5"
	0.024	14'-8"	14'-7"	12'-5"	11'-10"
	0.032	16'-4"	16'-4"	14'-11"	14'-5"
	0.036	16'-11"	16'-11"	15'-6"	15'-0"
20 LIVE	0.018	8'-2"	8'-2"	8'-2"	8'-2"
	0.024	10'-5"	10'-5"	10'-5"	10'-5"
	0.032	13'-2"	13'-2"	13'-2"	13'-2"
	0.036	13'-8"	13'-8"	13'-8"	13'-8"
25	0.018	8'-0"	8'-0"	8'-0"	8'-0"
	0.024	10'-2"	10'-2"	10'-2"	10'-2"
	0.032	13'-0"	13'-0"	13'-0"	13'-0"
	0.036	13'-6"	13'-6"	13'-6"	13'-6"
30	0.018	7'-3"	7'-3"	7'-3"	7'-3"
	0.024	9'-3"	9'-3"	9'-3"	9'-3"
	0.032	11'-10"	11'-10"	11'-10"	11'-10"
	0.036	12'-8"	12'-8"	12'-8"	12'-8"
40	0.018	6'-3"	6'-3"	6'-3"	6'-3"
	0.024	8'-0"	8'-0"	8'-0"	8'-0"
	0.032	10'-3"	10'-3"	10'-3"	10'-3"
	0.036	11'-3"	11'-3"	11'-3"	11'-3"
60	0.018	5'-0"	5'-0"	5'-0"	5'-0"
	0.024	6'-6"	6'-6"	6'-6"	6'-6"
	0.032	8'-4"	8'-4"	8'-4"	8'-4"
	0.036	9'-2"	9'-2"	9'-2"	9'-2"

TABLE 4.4

SINGLE SPAN TABLES

NOTE: PANELS MAY OVERHANG 25% OF THEIR CLEARSPAN

2.5" x6" Super Six (Single Span)

Ground Snow Load (psf)	Panel Gauge (in)	Wind Speed and Exposure Exp B 90	Exposure C 90	Exposure C 105	Exposure C 110
10 LIVE	0.018	13'-5"	10'-11"	9'-4"	8'-11"
	0.024	16'-9"	13'-7"	11'-7"	11'-1"
	0.032	19'-8"	17'-1"	14'-7"	13'-11"
	0.036	20'-4"	18'-10"	16'-1"	15'-4"
20 LIVE	0.018	11'-2"	10'-5"	9'-4"	8'-11"
	0.024	14'-6"	13'-7"	11'-7"	11'-1"
	0.032	15'-10"	15'-10"	14'-7"	13'-11"
	0.036	16'-5"	16'-5"	16'-1"	15'-4"
25	0.018	11'-0"	10'-1"	9'-4"	8'-11"
	0.024	14'-3"	13'-3"	11'-7"	11'-1"
	0.032	15'-7"	15'-7"	14'-7"	13'-11"
	0.036	16'-2"	16'-2"	16'-1"	15'-4"
30	0.018	10'-3"	9'-9"	9'-1"	8'-11"
	0.024	13'-1"	12'-6"	11'-7"	11'-1"
	0.032	14'-9"	14'-9"	14'-7"	13'-11"
	0.036	15'-3"	15'-3"	15'-3"	15'-3"
40	0.018	9'-0"	8'-9"	8'-5"	8'-3"
	0.024	11'-5"	11'-3"	10'-11"	10'-10"
	0.032	13'-5"	13'-5"	13'-5"	13'-5"
	0.036	13'-11"	13'-11"	13'-11"	13'-11"
60	0.018	7'-4"	7'-4"	7'-0"	6'-10"
	0.024	9'-4"	9'-4"	9'-4"	9'-3"
	0.032	11'-4"	11'-4"	11'-4"	11'-4"
	0.036	12'-1"	12'-1"	12'-1"	12'-1"

TABLE 4.5

3.5"x12" Super 12 (Single Span)

Ground Snow Load (psf)	Panel Gauge (in)	Wind Speed and Exposure Exp B 90	Exposure C 90	Exposure C 105	Exposure C 110
10 LIVE	0.018	11'-2"	8'-3"	6'-4"	5'-10"
	0.024	17'-5"	13'-8"	11'-3"	10'-7"
	0.032	20'-1"	19'-6"	16'-7"	15'-9"
	0.036	20'-10"	20'-10"	18'-9"	17'-11"
20 LIVE	0.018	6'-8"	6'-8"	6'-4"	5'-10"
	0.024	13'-3"	13'-3"	11'-3"	10'-7"
	0.032	15'-4"	15'-4"	15'-4"	15'-4"
	0.036	16'-4"	16'-4"	16'-4"	16'-4"
25	0.018	6'-4"	6'-4"	6'-4"	5'-10"
	0.024	12'-11"	12'-11"	11'-3"	10'-7"
	0.032	15'-0"	15'-0"	15'-0"	15'-0"
	0.036	16'-0"	16'-0"	16'-0"	16'-0"
30	0.018	5'-4"	5'-4"	5'-4"	5'-4"
	0.024	11'-10"	11'-10"	11'-3"	10'-7"
	0.032	13'-9"	13'-9"	13'-9"	13'-9"
	0.036	14'-7"	14'-7"	14'-7"	14'-7"
40	0.018	4'-0"	4'-0"	4'-0"	4'-0"
	0.024	9'-5"	9'-5"	9'-5"	9'-5"
	0.032	11'-11"	11'-11"	11'-11"	11'-11"
	0.036	12'-8"	12'-8"	12'-8"	12'-8"
60	0.018	2'-8"	2'-8"	2'-8"	2'-8"
	0.024	6'-4"	6'-4"	6'-4"	6'-4"
	0.032	9'-9"	9'-9"	9'-9"	9'-9"
	0.036	10'-5"	10'-5"	10'-5"	10'-5"

TABLE 4.6

2.5" x 12" Mark X (Single Span)

Ground Snow Load (psf)	Panel Gauge (in)	Wind Speed and Exposure Exposure C 90	Exposure C 90	Exposure C 105	Exposure C 110
10 LIVE	0.018	10'-11"	8'-11"	7'-7"	7'-3"
	0.024	14'-2"	11'-11"	10'-2"	9'-8"
	0.032	15'-6"	15'-6"	13'-7"	12'-11"
	0.036	16'-0"	16'-0"	14'-6"	14'-0"
20 LIVE	0.018	9'-5"	8'-11"	7'-7"	7'-3"
	0.024	11'-4"	11'-4"	10'-2"	9'-8"
	0.032	12'-5"	12'-5"	12'-5"	12'-5"
	0.036	12'-11"	12'-11"	12'-11"	12'-11"
25	0.018	9'-3"	8'-11"	7'-7"	7'-3"
	0.024	11'-1"	11'-1"	10'-2"	9'-8"
	0.032	12'-3"	12'-3"	12'-3"	12'-3"
	0.036	12'-8"	12'-8"	12'-8"	12'-8"
30	0.018	8'-5"	8'-5"	7'-7"	7'-3"
	0.024	10'-1"	10'-1"	10'-1"	9'-8"
	0.032	11'-6"	11'-6"	11'-6"	11'-6"
	0.036	12'-0"	12'-0"	12'-0"	12'-0"
40	0.018	7'-4"	7'-4"	7'-4"	7'-3"
	0.024	8'-9"	8'-9"	8'-9"	8'-9"
	0.032	10'-5"	10'-5"	10'-5"	10'-5"
	0.036	10'-11"	10'-11"	10'-11"	10'-11"
60	0.018	5'-4"	5'-4"	5'-4"	5'-4"
	0.024	7'-2"	7'-2"	7'-2"	7'-2"
	0.032	8'-6"	8'-6"	8'-6"	8'-6"
	0.036	9'-2"	9'-2"	9'-2"	9'-2"

TABLE 4.7

2"x6" Flat Panel (Single Span)

Ground Snow Load (psf)	Panel Gauge (in)	Wind Speed and Exposure Exp B 90	Exposure C 90	Exposure C 105	Exposure C 110
10 LIVE	0.018	13'-3"	11'-7"	9'-10"	9'-5"
	0.024	15'-0"	14'-7"	12'-5"	11'-10"
	0.032	16'-4"	16'-4"	14'-11"	14'-5"
	0.036	16'-9"	16'-9"	15'-6"	15'-0"
20 LIVE	0.018	10'-0"	9'-9"	9'-4"	9'-1"
	0.024	12'-0"	12'-0"	11'-11"	11'-9"
	0.032	13'-2"	13'-2"	13'-2"	13'-2"
	0.036	13'-8"	13'-8"	13'-8"	13'-8"
25	0.018	9'-10"	9'-7"	9'-1"	9'-0"
	0.024	11'-10"	11'-10"	11'-8"	11'-7"
	0.032	13'-0"	13'-0"	13'-0"	13'-0"
	0.036	13'-6"	13'-6"	13'-6"	13'-6"
30	0.018	9'-0"	9'-0"	8'-7"	8'-6"
	0.024	11'-2"	11'-2"	11'-1"	10'-11"
	0.032	12'-3"	12'-3"	12'-3"	12'-3"
	0.036	12'-8"	7'-9"	7'-9"	7'-8"
40	0.018	7'-9"	7'-9"	7'-8"	7'-8"
	0.024	9'-10"	9'-10"	9'-10"	9'-10"
	0.032	11'-2"	11'-2"	11'-2"	11'-2"
	0.036	11'-7"	11'-7"	11'-7"	11'-7"
60	0.018	6'-4"	6'-4"	6'-4"	6'-4"
	0.024	8'-0"	8'-0"	8'-0"	8'-0"
	0.032	9'-7"	9'-7"	9'-7"	9'-7"
	0.036	10'-2"	10'-2"	10'-2"	10'-2"

TABLE 4.8

Amerimax Building Product
5208 Tennyson Parkway
Plano, Texas 75024

Carl Putnam, P. E.
3441 Ivylink Place
Lynchburg, VA 24503
(434) 384-2514
carlputnam@comcast.net

REGISTERED PROFESSIONAL ENGINEER CARL PUTNAM C 68139 EXP. 6/30/2009 CIVIL STATE OF CALIFORNIA

4/27/2009

MAXIMUM ALLOWABLE TRIBUTARY WIDTH AND **#10** SCREWS FOR PANEL/HEADER COMBINATIONS **Table 4.9**

Headers	Panel Gauge (in)	# of #10 screws per foot to attach panel to header: 90 mph Exp B 2	3	4	90 mph Exp C 2	3	4	110 mph Exp C 2	3	4	5
Dble 2x6.625	0.018	7'	10'	MAX	5'	8'	MAX	4'	5'	7'	MAX
RF Fascia	0.018	7'	MAX	MAX	5'	MAX	MAX	4'	5'	MAX	MAX
3x8	0.018	7'	10'	MAX	5'	8'	MAX	4'	5'	7'	MAX
All Others	0.018	7'	10'	MAX	5'	8'	MAX	4'	5'	7'	MAX
Dble 2x6.625	0.024	9'	13'	MAX	7'	11'	MAX	5'	7'	10'	MAX
RF Fascia	0.024	9'	MAX	MAX	7'	MAX	MAX	5'	MAX	MAX	MAX
3x8	0.024	9'	13'	MAX	7'	11'	MAX	5'	7'	10'	MAX
All Others	0.024	9'	13'	MAX	7'	11'	MAX	5'	7'	10'	MAX
Dble 2x6.625	0.032	9'	14'	MAX	7'	11'	15'	5'	7'	10'	12'
RF Fascia	0.032	MAX	MAX	MAX	8'	MAX	MAX	6'	8'	MAX	MAX
3x8	0.032	11'	MAX	MAX	9'	13'	MAX	6'	9'	12'	MAX
All Others	0.032	12'	MAX	MAX	10'	15'	MAX	6'	10'	13'	MAX
Dble 2x6.625	0.036	9'	14'	MAX	7'	11'	15'	5'	7'	10'	12'
RF Fascia	0.036	10'	MAX	MAX	8'	MAX	MAX	6'	8'	MAX	MAX
3x8	0.036	11'	MAX	MAX	9'	13'	MAX	6'	9'	12'	MAX
All Others	0.036	13'	MAX	MAX	11'	MAX	MAX	7'	11'	MAX	MAX

'MAX' means the maximum possible tributary width

MAXIMUM ALLOWABLE TRIBUTARY WIDTH AND **#14** SCREWS FOR PANEL/HEADER COMBINATIONS **Table 4.10**

Headers	Panel Gauge (in)	# of #14 screws per foot to attach panel to header: 90 mph Exp B 2	3		90 mph Exp C 2	3		110 mph Exp C 2	3	4	
Dble 2x6.625	0.018	9'	MAX		8'	MAX		5'	8'	MAX	
RF Fascia	0.018	MAX	MAX		MAX	MAX		5'	MAX	MAX	
3x8	0.018	9'	MAX		8'	MAX		5'	8'	MAX	
All Others	0.018	9'	MAX		8'	MAX		5'	8'	MAX	
Dble 2x6.625	0.024	12'	MAX		10'	MAX		7'	10'	MAX	
RF Fascia	0.024	MAX	MAX		MAX	MAX		7'	MAX	MAX	
3x8	0.024	12'	MAX		10'	MAX		7'	10'	MAX	
All Others	0.024	12'	MAX		10'	MAX		7'	10'	MAX	
Dble 2x6.625	0.032	12'	MAX		10'	MAX		7'	10'	MAX	
RF Fascia	0.032	MAX	MAX		MAX	MAX		8'	MAX	MAX	
3x8	0.032	15'	MAX		12'	MAX		8'	12'	MAX	
All Others	0.032	MAX	MAX		13'	MAX		9'	MAX	MAX	
Dble 2x6.625	0.036	12'	MAX		10'	MAX		7'	10'	14'	
RF Fascia	0.036	MAX	MAX		MAX	MAX		8'	MAX	MAX	
3x8	0.036	15'	MAX		12'	MAX		8'	12'	MAX	
All Others	0.036	MAX	MAX		MAX	MAX		10'	MAX	MAX	

SOLID COVER 5.0 POST SPACINGS FOR PATIO AND COMMERCIAL COVERS 90 MPH WIND AREAS

TABLE 5.1

GROUND SNOW LOAD (PSF)	TRIB WIDTH (FT)	MAX POST SPACING ON SLAB (FT)	POST REQ'D FOR SLAB	0.042"x3"x8" Box Beam (Detail N30) MAX POST SPACING (FT)	Attached Structure MIN POST TYPE	Attached Structure FOOTER SIZE "d" (in)	Freestanding or Multispan Units MAX POST LENGTH 8' CONSTRAINED FOOTER "d" (in)	10' CONSTRAINED FOOTER "d" (in)	12' CONSTRAINED FOOTER "d" (in)	Double 0.042"x3"x8" Beam (Detail N25) MAX POST SPACING (FT)	Attached Structure MIN POST TYPE	Attached Structure FOOTER SIZE "d" (in)	Freestanding or Multispan Units MAX POST LENGTH 8' CONSTRAINED FOOTER "d" (in)	10' CONSTRAINED FOOTER "d" (in)	12' CONSTRAINED FOOTER "d" (in)	Double 0.032"x2"x6.625" Beam (Detail N25) MAX POST SPACING (FT)	Attached Structure MIN POST TYPE	Attached Structure FOOTER SIZE "d" (in)	Freestanding or Multispan Units MAX POST LENGTH 8' CONSTRAINED FOOTER "d" (in)	10' CONSTRAINED FOOTER "d" (in)	12' CONSTRAINED FOOTER "d" (in)
90 MPH EXPOSURE B																					
10 LIVE	3	22'-8"	A	15'-0"	A	20	25	26	28	22'-2"	A	23	27	29	30	15'-8"	A	21	24	26	27
	3.5	19'-5"	A	13'-6"	A	21	24	26	27	20'-7"	B	24	27	28	30	14'-2"	A	21	24	25	26
	4	17'-0"	A	12'-3"	A	21	24	25	26	19'-3"	B	24	26	28	29	12'-11"	A	21	23	25	26
	4.5	15'-1"	A	11'-2"	A	21	23	25	26	18'-2"	B	25	26	27	29	11'-11"	A	22	23	24	25
	5	13'-7"	A	10'-4"	A	21	23	24	25	17'-3"	B	25	26	27	28	11'-0"	A	22	22	24	25
	5.5	12'-4"	A	9'-7"	A	21	22	24	25	16'-2"	B	25	25	27	28	10'-3"	A	22	22	23	25
	6	11'-4"	A	8'-11"	A	22	22	23	25	15'-2"	B	26	26	26	28	9'-8"	A	22	22	23	24
	6.5	10'-5"	A	8'-5"	A	22	22	23	24	14'-4"	C	26	26	26	27	9'-1"	A	22	22	23	24
	7	9'-8"	A	7'-11"	A	22	22	23	24	13'-7"	C	26	26	26	27	8'-7"	A	22	22	22	24
	7.5	9'-1"	A	7'-5"	A	22	22	23	24	12'-11"	C	26	26	26	27	8'-1"	A	22	22	22	23
	8	8'-6"	A	7'-1"	A	22	22	22	24	12'-4"	C	26	26	26	26	7'-9"	A	23	23	23	23
	8.5	8'-0"	A	6'-9"	A	22	22	22	23	11'-9"	C	27	27	27	27	7'-4"	A	23	23	23	23
	9	7'-6"	A	6'-5"	A	22	22	22	23	11'-3"	C	27	27	27	27	7'-0"	A	23	23	23	23
	9.5	7'-2"	A	6'-1"	A	22	22	22	23	10'-10"	C	27	27	27	27	6'-9"	A	23	23	23	23
	10	6'-9"	A	5'-10"	A	22	22	22	23	10'-5"	C	27	27	27	27	6'-5"	A	23	23	23	23
	11	6'-2"	A	5'-4"	A	22	22	22	22	9'-8"	C	27	27	27	27	5'-11"	A	23	23	23	23
	12	5'-8"	A	5'-0"	A	22	22	22	22	9'-0"	C	27	27	27	27	5'-6"	A	23	23	23	23
	13	5'-2"	A	4'-7"	A	22	22	22	22	8'-5"	C	27	27	27	27	5'-2"	A	23	23	23	23
90 MPH EXPOSURE C																					
10 LIVE	3	22'-8"	A	14'-0"	A	23	27	29	30	21'-7"	A	26	30	32	33	15'-2"	A	23	27	28	30
	3.5	19'-5"	A	12'-9"	A	23	26	28	29	19'-11"	B	27	29	31	33	14'-0"	A	24	26	28	29
	4	17'-0"	A	11'-9"	A	24	26	28	29	18'-8"	B	28	29	31	32	12'-11"	A	24	26	27	29
	4.5	15'-1"	A	10'-11"	A	24	25	27	28	17'-7"	B	28	28	30	32	11'-11"	A	25	25	27	28
	5	13'-7"	A	10'-2"	A	24	25	27	28	16'-8"	B	29	29	30	31	11'-0"	A	25	25	26	28
	5.5	12'-4"	A	9'-7"	A	25	25	26	28	15'-10"	B	29	29	29	31	10'-3"	A	25	25	26	27
	6	11'-4"	A	8'-11"	A	25	25	26	27	15'-2"	B	30	30	30	31	9'-8"	A	25	25	26	27
	6.5	10'-5"	A	8'-5"	A	25	25	26	27	14'-4"	C	30	30	30	30	9'-1"	A	26	26	26	27
	7	9'-8"	A	7'-11"	A	25	25	25	27	13'-7"	C	30	30	30	30	8'-7"	A	26	26	26	26
	7.5	9'-1"	A	7'-5"	A	25	25	25	26	12'-11"	C	30	30	30	30	8'-1"	A	26	26	26	26
	8	8'-6"	A	7'-1"	A	25	25	25	26	12'-4"	C	30	30	30	30	7'-9"	A	26	26	26	26
	8.5	8'-0"	A	6'-9"	A	25	25	25	26	11'-9"	C	30	30	30	30	7'-4"	A	26	26	26	26
	9	7'-6"	A	6'-5"	A	25	25	25	26	11'-3"	C	31	31	31	31	7'-0"	A	26	26	26	26
	9.5	7'-2"	A	6'-1"	A	25	25	25	25	10'-10"	C	31	31	31	31	6'-9"	A	26	26	26	26
	10	6'-9"	A	5'-10"	A	25	25	25	25	10'-5"	C	31	31	31	31	6'-5"	A	26	26	26	26
	11	6'-2"	A	5'-4"	A	26	26	26	26	9'-8"	C	31	31	31	31	5'-11"	A	26	26	26	26
	12	5'-8"	A	5'-0"	A	26	26	26	26	9'-0"	C	31	31	31	31	5'-6"	A	27	27	27	27
	13	5'-2"	A	4'-7"	A	26	26	26	26	8'-5"	C	31	31	31	31	5'-2"	A	27	27	27	27
90 MPH EXPOSURE B																					
20 LIVE	3	11'-10"	A	9'-4"	A	17	22	24	25	15'-9"	B	21	25	27	28	10'-1"	A	18	22	23	24
	3.5	10'-2"	A	8'-3"	A	18	22	23	24	14'-2"	C	21	24	26	27	8'-11"	A	18	21	23	24
	4	8'-11"	A	7'-5"	A	18	21	23	24	12'-10"	C	21	24	25	27	8'-1"	A	18	21	22	23
	4.5	7'-11"	A	6'-8"	A	18	21	22	23	11'-9"	C	21	23	25	26	7'-4"	A	18	20	22	23
	5	7'-1"	A	6'-1"	A	18	20	22	23	10'-10"	C	22	23	24	26	6'-9"	A	18	20	21	23
	5.5	6'-5"	A	5'-8"	A	18	20	21	23	10'-1"	C	22	23	24	25	6'-3"	A	19	20	21	22
	6	5'-11"	A	5'-3"	A	18	20	21	22	9'-5"	C	22	22	24	25	5'-9"	A	19	19	21	22
	6.5	5'-5"	A	4'-10"	A	18	19	21	22	8'-10"	C	22	22	23	25	5'-5"	A	19	19	21	22
	7	5'-1"	A	4'-6"	A	18	19	20	22	8'-4"	C	22	22	23	24	5'-1"	B	19	19	20	21
	7.5	4'-9"	A	4'-3"	A	18	19	20	21	7'-10"	C	22	22	23	24	4'-9"	B	19	19	20	21
	8	4'-5"	A	4'-0"	A	18	19	20	21	7'-5"	C	22	22	23	24	4'-6"	B	19	19	20	21
	8.5	4'-2"	A	3'-10"	A	18	19	20	21	7'-1"	C	22	22	22	24	4'-3"	B	19	19	20	21
	9	3'-11"	A	3'-7"	A	18	18	20	21	6'-9"	C	22	22	22	23	4'-1"	B	19	19	20	21
	9.5	3'-9"	A	3'-5"	A	18	18	19	21	6'-5"	C	22	22	22	23	3'-10"	B	19	19	19	21
	10	3'-6"	A	3'-3"	A	18	18	19	20	6'-2"	C	23	23	23	23	3'-8"	B	19	19	19	20
	11	3'-2"	A	3'-0"	A	18	18	19	20	5'-8"	C	23	23	23	23	3'-5"	B	19	19	19	20
	12	2'-11"	A	2'-9"	A	18	18	19	20	5'-3"	C	23	23	23	23	3'-1"	B	19	19	19	20
	13	2'-8"	A	2'-6"	A	18	18	19	20	4'-10"	C	23	23	23	23	2'-11"	B	19	19	19	20

TABLE 5.1

GROUND SNOW LOAD (PSF)	TRIB WIDTH (FT)	MAX POST SPACING ON SLAB (FT)	POST REQ'D FOR SLAB	0.042"x3"x8" Box Beam (Detail N30) MAX POST SPACING (FT)	Attached Structure MIN POST TYPE	Attached Structure FOOTER SIZE "d" (in)	Freestanding or Multispan Units MAX POST LENGTH 8' CONSTRAINED FOOTER "d" (in)	10' CONSTRAINED FOOTER "d" (in)	12' CONSTRAINED FOOTER "d" (in)	Double 0.042"x3"x8" Beam (Detail N25) MAX POST SPACING (FT)	Attached Structure MIN POST TYPE	Attached Structure FOOTER SIZE "d" (in)	Freestanding or Multispan Units MAX POST LENGTH 8' CONSTRAINED FOOTER "d" (in)	10' CONSTRAINED FOOTER "d" (in)	12' CONSTRAINED FOOTER "d" (in)	Double 0.032"x2"x6.625" Beam (Detail N25) MAX POST SPACING (FT)	Attached Structure MIN POST TYPE	Attached Structure FOOTER SIZE "d" (in)	Freestanding or Multispan Units MAX POST LENGTH 8' CONSTRAINED FOOTER "d" (in)	10' CONSTRAINED FOOTER "d" (in)	12' CONSTRAINED FOOTER "d" (in)
90 MPH EXPOSURE B																					
30	3	8'-0"	A	7'-10"	A	16	21	23	24	13'-6"	C	20	24	26	27	8'-6"	B	17	21	22	24
	3.5	6'-10"	A	6'-11"	B	16	21	22	23	12'-1"	C	20	24	25	26	7'-6"	B	17	21	22	23
	4	6'-0"	A	6'-2"	B	17	20	22	23	10'-11"	C	20	23	24	26	6'-9"	B	17	20	21	23
	4.5	5'-4"	A	5'-6"	B	17	20	21	22	9'-11"	C	20	23	24	25	6'-2"	B	17	20	21	22
	5	4'-10"	A	5'-1"	B	17	20	21	22	9'-2"	C	20	22	24	25	5'-7"	B	17	19	21	22
	5.5	4'-4"	A	4'-8"	B	17	19	21	22	8'-6"	C	21	22	23	24	5'-2"	B	17	19	20	22
	6	4'-0"	A	4'-3"	B	17	19	20	21	7'-10"	C	21	21	23	24	4'-9"	B	18	19	20	21
	6.5	3'-8"	A	4'-0"	B	17	19	20	21	7'-4"	C	21	21	23	24	4'-6"	B	18	19	20	21
	7	3'-5"	A	3'-8"	B	17	18	20	21	6'-11"	C	21	21	22	23	4'-2"	B	18	18	20	21
	7.5	3'-2"	A	3'-6"	B	17	18	20	21	6'-6"	C	21	21	22	23	3'-11"	B	18	18	19	21
	8	3'-0"	A	3'-3"	B	17	18	19	20	6'-2"	C	21	21	22	23	3'-8"	B	18	18	19	20
	8.5	2'-10"	A	3'-1"	B	17	18	19	20	5'-10"	C	21	21	21	23	3'-6"	B	18	18	19	20
	9	2'-8"	A	2'-11"	B	17	18	19	20	5'-7"	C	21	21	21	22	3'-4"	B	18	18	19	20
	9.5	2'-6"	A	2'-9"	B	17	18	19	20	5'-4"	C	21	21	21	22	3'-2"	B	18	18	19	20
90 MPH EXPOSURE C																					
30	3	8'-0"	A	7'-10"	A	19	24	25	27	13'-6"	C	23	27	28	30	8'-6"	B	19	23	25	26
	3.5	6'-10"	A	6'-11"	B	19	23	25	26	12'-1"	C	23	26	28	29	7'-6"	B	20	23	24	26
	4	6'-0"	A	6'-2"	B	19	23	24	25	10'-11"	C	23	25	27	28	6'-9"	B	20	22	24	25
	4.5	5'-4"	A	5'-6"	B	19	22	24	25	9'-11"	C	23	25	27	28	6'-2"	B	20	22	23	25
	5	4'-10"	A	5'-1"	B	19	22	23	24	9'-2"	C	23	25	26	27	5'-7"	B	20	21	23	24
	5.5	4'-4"	A	4'-8"	B	19	21	23	24	8'-6"	C	24	24	26	27	5'-2"	B	20	21	23	24
	6	4'-0"	A	4'-3"	B	19	21	22	24	7'-10"	C	24	24	25	27	4'-9"	B	20	21	22	24
	6.5	3'-8"	A	4'-0"	B	19	21	22	23	7'-4"	C	24	24	25	26	4'-6"	B	20	21	22	23
	7	3'-5"	A	3'-8"	B	19	20	22	23	6'-11"	C	24	24	25	26	4'-2"	B	20	20	22	23
	7.5	3'-2"	A	3'-6"	B	20	20	22	23	6'-6"	C	24	24	24	26	3'-11"	B	20	20	22	23
	8	3'-0"	A	3'-3"	B	20	20	21	23	6'-2"	C	24	24	24	25	3'-8"	B	20	20	21	23
	8.5	2'-10"	A	3'-1"	B	20	20	21	22	5'-10"	C	24	24	24	25	3'-6"	B	20	20	21	22
	9	2'-8"	A	2'-11"	B	20	20	21	22	5'-7"	C	24	24	24	25	3'-4"	B	20	20	21	22
	9.5	2'-6"	A	2'-9"	B	20	20	21	22	5'-4"	C	24	24	24	25	3'-2"	B	20	20	21	22
40	3	6'-1"	A	6'-2"	B	17	23	24	25	11'-0"	C	21	26	27	29	6'-10"	B	18	22	24	25
	3.5	5'-2"	A	5'-5"	B	18	22	23	25	9'-9"	C	21	25	26	28	6'-0"	B	18	22	23	25
	4	4'-6"	A	4'-10"	B	18	21	23	24	8'-9"	C	21	24	26	27	5'-4"	B	18	21	23	24
	4.5	4'-0"	A	4'-4"	B	18	21	22	24	7'-11"	C	22	24	25	27	4'-10"	B	18	21	22	24
	5	3'-7"	A	3'-11"	B	18	21	22	23	7'-3"	C	22	23	25	26	4'-5"	B	18	20	22	23
	5.5	3'-3"	A	3'-7"	B	18	20	22	23	6'-9"	C	22	23	24	26	4'-1"	B	19	20	22	23
	6	3'-0"	A	3'-4"	B	18	20	21	23	6'-3"	C	22	23	24	25	3'-9"	B	19	20	21	23
	6.5	2'-9"	A	3'-1"	B	18	20	21	22	5'-10"	C	22	22	24	25	3'-6"	B	19	20	21	22
	7	2'-7"	A	2'-10"	B	18	19	21	22	5'-5"	C	22	22	23	25	3'-3"	B	19	19	21	22
	7.5	2'-5"	A	2'-8"	B	18	19	21	22	5'-1"	C	22	22	23	25	3'-1"	B	19	19	21	22
	8	2'-3"	A	2'-6"	B	18	19	21	22	4'-10"	C	22	22	23	24	2'-10"	B	19	19	20	22
	8.5	2'-1"	A	2'-4"	B	18	19	20	22	4'-7"	C	22	22	23	24	2'-8"	B	19	19	20	22
	9	2'-0"	A	2'-3"	B	18	19	20	21	4'-4"	C	22	22	22	24	2'-7"	B	19	19	20	21
90 MPH EXPOSURE B																					
40	3	6'-1"	A	6'-2"	B	15	20	22	23	11'-0"	C	18	23	24	26						
	3.5	5'-2"	A	5'-5"	B	15	20	21	22	9'-9"	C	19	22	24	25						
	4	4'-6"	A	4'-10"	B	15	19	21	22	8'-9"	C	19	22	23	25						
	4.5	4'-0"	A	4'-4"	B	15	19	20	21	7'-11"	C	19	21	23	24						
	5	3'-7"	A	3'-11"	B	15	19	20	21	7'-3"	C	19	21	22	24						
	5.5	3'-3"	A	3'-7"	B	15	18	20	21	6'-9"	C	19	21	22	23						
	6	3'-0"	A	3'-4"	B	15	18	19	21	6'-3"	C	19	20	22	23						
	6.5	2'-9"	A	3'-1"	B	16	18	19	20	5'-10"	C	19	20	21	23						
	7	2'-7"	A	2'-10"	B	16	18	19	20	5'-5"	C	19	20	21	22						
	7.5	2'-5"	A	2'-8"	B	16	17	19	20	5'-1"	C	19	20	21	22						
	8	2'-3"	A	2'-6"	B	16	17	19	20	4'-10"	C	19	19	21	22						
	8.5	2'-1"	A	2'-4"	B	16	17	18	20	4'-7"	C	19	19	20	22						
	9	2'-0"	A	2'-3"	B	16	17	18	19	4'-4"	C	19	19	20	21						

4/27/2009

SOLID COVER 5.0 POST SPACINGS FOR PATIO AND COMMERCIAL COVERS 90 MPH WIND AREAS

TABLE 5.1

GROUND SNOW LOAD (PSF)	TRIB WIDTH (FT)	MAX POST SPACING ON SLAB (FT)	POST REQ'D FOR SLAB	0.042"x3"x8" Box Beam (Detail N30) MAX POST SPACING (FT)	Attached Structure MIN POST TYPE	Attached Structure FOOTER SIZE "d" (in)	Freestanding or Multispan Units MAX POST LENGTH 8' CONSTRAINED FOOTER "d" (in)	10' CONSTRAINED FOOTER "d" (in)	12' CONSTRAINED FOOTER "d" (in)	Double 0.042"x3"x8" Beam (Detail N25) MAX POST SPACING (FT)	Attached Structure MIN POST TYPE	Attached Structure FOOTER SIZE "d" (in)	Freestanding or Multispan Units MAX POST LENGTH 8' CONSTRAINED FOOTER "d" (in)	10' CONSTRAINED FOOTER "d" (in)	12' CONSTRAINED FOOTER "d" (in)	Double 0.032"x2"x6.625" Beam (Detail N25) MAX POST SPACING (FT)	Attached Structure MIN POST TYPE	Attached Structure FOOTER SIZE "d" (in)	Freestanding or Multispan Units MAX POST LENGTH 8' CONSTRAINED FOOTER "d" (in)	10' CONSTRAINED FOOTER "d" (in)	12' CONSTRAINED FOOTER "d" (in)
90 MPH EXPOSURE C																					
20 LIVE	3	11'-10"	A	9'-4"	A	20	25	26	28	15'-9"	B	24	28	29	31	10'-1"	A	20	24	26	27
	3.5	10'-2"	A	8'-3"	A	20	24	26	27	14'-2"	C	24	27	29	30	8'-11"	A	21	24	25	26
	4	8'-11"	A	7'-5"	A	20	23	25	26	12'-10"	C	24	26	28	29	8'-1"	A	21	23	25	26
	4.5	7'-11"	A	6'-8"	A	20	23	24	26	11'-9"	C	25	26	28	29	7'-4"	A	21	23	24	25
	5	7'-1"	A	6'-1"	A	21	23	24	25	10'-10"	C	25	25	27	28	6'-9"	A	21	22	24	25
	5.5	6'-5"	A	5'-8"	A	21	22	24	25	10'-1"	C	25	25	27	28	6'-3"	A	21	22	23	25
	6	5'-11"	A	5'-3"	A	21	22	23	25	9'-5"	C	25	25	26	28	5'-9"	A	21	22	23	24
	6.5	5'-5"	A	4'-10"	A	21	22	23	24	8'-10"	C	25	25	26	27	5'-5"	A	22	22	23	24
	7	5'-1"	A	4'-6"	A	21	21	23	24	8'-4"	C	25	25	26	27	5'-1"	B	22	22	22	24
	7.5	4'-9"	A	4'-3"	A	21	21	22	24	7'-10"	C	26	26	26	27	4'-9"	B	22	22	22	24
	8	4'-5"	A	4'-0"	A	21	21	22	23	7'-5"	C	26	26	26	26	4'-6"	B	22	22	22	23
	8.5	4'-2"	A	3'-10"	A	21	21	22	23	7'-1"	C	26	26	26	26	4'-3"	B	22	22	22	23
	9	3'-11"	A	3'-7"	A	21	21	22	23	6'-9"	C	26	26	26	26	4'-1"	B	22	22	22	23
	9.5	3'-9"	A	3'-5"	A	21	21	22	23	6'-5"	C	26	26	26	26	3'-10"	B	22	22	22	23
	10	3'-6"	A	3'-3"	A	21	21	21	23	6'-2"	C	26	26	26	26	3'-8"	B	22	22	22	23
	11	3'-2"	A	3'-0"	A	21	21	21	22	5'-8"	C	26	26	26	26	3'-5"	B	22	22	22	22
90 MPH EXPOSURE B																					
25	3	9'-7"	A	9'-0"	A	17	22	23	25	15'-3"	C	20	25	26	28	9'-8"	B	18	22	23	24
	3.5	8'-2"	A	7'-11"	A	17	21	23	24	13'-8"	C	21	24	26	27	8'-8"	B	18	21	23	24
	4	7'-2"	A	7'-1"	A	17	21	22	24	12'-5"	C	21	24	25	26	7'-9"	B	18	21	22	23
	4.5	6'-4"	A	6'-5"	B	18	21	22	23	11'-4"	C	21	23	25	26	7'-1"	B	18	20	22	23
	5	5'-9"	A	5'-11"	B	18	20	22	23	10'-6"	C	21	23	24	25	6'-6"	B	18	20	21	22
	5.5	5'-2"	A	5'-5"	B	18	20	21	22	9'-9"	C	22	22	24	25	6'-0"	B	18	20	21	22
	6	4'-9"	A	5'-0"	B	18	20	21	22	9'-1"	C	22	22	23	25	5'-7"	B	18	19	21	22
	6.5	4'-5"	A	4'-8"	B	18	19	21	22	8'-6"	C	22	22	23	24	5'-2"	B	18	19	20	22
	7	4'-1"	A	4'-4"	B	18	19	20	21	8'-0"	C	22	22	23	24	4'-10"	B	19	19	20	21
	7.5	3'-10"	A	4'-1"	B	18	19	20	21	7'-7"	C	22	22	23	24	4'-7"	B	19	19	20	21
	8	3'-7"	A	3'-10"	B	18	19	20	21	7'-2"	C	22	22	22	24	4'-4"	B	19	19	20	21
	8.5	3'-4"	A	3'-8"	B	18	18	20	21	6'-10"	C	22	22	22	23	4'-1"	B	19	19	20	21
	9	3'-2"	A	3'-5"	B	18	18	19	21	6'-6"	C	22	22	22	23	3'-11"	B	19	19	19	21
	9.5	3'-0"	A	3'-3"	B	18	18	19	20	6'-2"	C	22	22	22	23	3'-8"	B	19	19	19	20
90 MPH EXPOSURE C																					
25	3	9'-7"	A	9'-0"	A	20	24	26	27	15'-3"	C	23	28	29	31	9'-8"	B	20	24	26	27
	3.5	8'-2"	A	7'-11"	A	20	24	25	27	13'-8"	C	24	27	28	30	8'-8"	B	20	23	25	26
	4	7'-2"	A	7'-1"	A	20	23	25	26	12'-5"	C	24	26	28	29	7'-9"	B	21	23	24	26
	4.5	6'-4"	A	6'-5"	B	20	23	24	26	11'-4"	C	24	26	27	29	7'-1"	B	21	22	24	25
	5	5'-9"	A	5'-11"	B	20	22	24	25	10'-6"	C	25	25	27	28	6'-6"	B	21	22	24	25
	5.5	5'-2"	A	5'-5"	B	20	22	23	25	9'-9"	C	25	25	26	28	6'-0"	B	21	22	23	25
	6	4'-9"	A	5'-0"	B	20	22	23	24	9'-1"	C	25	25	26	27	5'-7"	B	21	21	23	24
	6.5	4'-5"	A	4'-8"	B	20	21	23	24	8'-6"	C	25	25	26	27	5'-2"	B	21	21	23	24
	7	4'-1"	A	4'-4"	B	21	21	23	24	8'-0"	C	25	25	25	27	4'-10"	B	21	21	22	24
	7.5	3'-10"	A	4'-1"	B	21	21	22	24	7'-7"	C	25	25	25	26	4'-7"	B	21	21	22	23
	8	3'-7"	A	3'-10"	B	21	21	22	23	7'-2"	C	25	25	25	26	4'-4"	B	21	21	22	23
	8.5	3'-4"	A	3'-8"	B	21	21	22	23	6'-10"	C	25	25	25	26	4'-1"	B	21	21	22	23
	9	3'-2"	A	3'-5"	B	21	21	22	23	6'-6"	C	25	25	25	26	3'-11"	B	22	22	22	23
	9.5	3'-0"	A	3'-3"	B	21	21	21	23	6'-2"	C	26	26	26	26	3'-8"	B	22	22	22	23
	10	2'-10"	A	3'-1"	B	21	21	21	23	5'-11"	C	26	26	26	26	3'-6"	B	22	22	22	22

TABLE 5.1

GROUND SNOW LOAD (PSF)	TRIB WIDTH (FT)	MAX POST SPACING ON SLAB (FT)	POST REQ'D FOR SLAB	0.042"x3"x8" Box Beam (Detail N30) MAX POST SPACING (FT)	Attached Structure MIN POST TYPE	Attached Structure FOOTER SIZE "d" (in)	Freestanding or Multispan Units MAX POST LENGTH 8' CONSTRAINED FOOTER "d" (in)	10' CONSTRAINED FOOTER "d" (in)	12' CONSTRAINED FOOTER "d" (in)	Double 0.042"x3"x8" Beam (Detail N25) MAX POST SPACING (FT)	Attached Structure MIN POST TYPE	Attached Structure FOOTER SIZE "d" (in)	Freestanding or Multispan Units MAX POST LENGTH 8' CONSTRAINED FOOTER "d" (in)	10' CONSTRAINED FOOTER "d" (in)	12' CONSTRAINED FOOTER "d" (in)	Double 0.032"x2"x6.625" Beam (Detail N25) MAX POST SPACING (FT)	Attached Structure MIN POST TYPE	Attached Structure FOOTER SIZE "d" (in)	Freestanding or Multispan Units MAX POST LENGTH 8' CONSTRAINED FOOTER "d" (in)	10' CONSTRAINED FOOTER "d" (in)	12' CONSTRAINED FOOTER "d" (in)
90 MPH EXPOSURE B																					
60	3	4'-1"	A	4'-4"	B	13	19	20	22	8'-0"	C	16	22	23	24	4'-11"	B	14	19	20	21
	3.5	3'-6"	A	3'-9"	B	14	19	20	21	7'-1"	C	17	21	22	24	4'-3"	B	14	18	20	21
	4	3'-0"	A	3'-4"	B	14	18	19	21	6'-3"	C	17	20	22	23	3'-9"	B	14	18	19	20
	4.5	2'-8"	A	3'-0"	B	14	18	19	20	5'-8"	C	17	20	21	23	3'-5"	B	14	18	19	20
	5	2'-5"	A	2'-8"	B	14	17	19	20	5'-2"	C	17	20	21	22	3'-1"	B	14	17	19	20
	5.5	2'-2"	A	2'-6"	B	14	17	18	20	4'-9"	C	17	19	21	22	2'-10"	B	14	17	18	20
	6	2'-0"	A	2'-3"	B	14	17	18	19	4'-5"	C	17	19	20	22	2'-7"	B	14	17	18	19
	6.5	1'-10"	A	2'-1"	B	14	17	18	19	4'-1"	C	17	19	20	21	2'-5"	B	14	17	18	19
	7	1'-9"	A	1'-11"	B	14	17	18	19	3'-10"	C	17	19	20	21	2'-3"	B	14	16	18	19
	7.5	1'-7"	A	1'-10"	B	14	16	18	19	3'-7"	C	17	18	20	21	2'-1"	B	14	16	18	19
	8	1'-6"	A	1'-8"	B	14	16	18	19	3'-4"	C	17	18	19	21	2'-0"	B	14	16	17	19
	8.5	1'-5"	A	1'-7"	B	14	16	17	19	3'-2"	C	17	18	19	20	1'-10"	B	14	16	17	19
90 MPH EXPOSURE C																					
60	3	4'-1"	A	4'-4"	B	16	21	23	24	8'-0"	C	19	24	25	27	4'-11"	B	16	21	22	24
	3.5	3'-6"	A	3'-9"	B	16	21	22	23	7'-1"	C	19	23	25	26	4'-3"	B	16	20	22	23
	4	3'-0"	A	3'-4"	B	16	20	21	23	6'-3"	C	19	23	24	25	3'-9"	B	16	20	21	23
	4.5	2'-8"	A	3'-0"	B	16	20	21	22	5'-8"	C	19	22	24	25	3'-5"	B	16	20	21	22
	5	2'-5"	A	2'-8"	B	16	19	21	22	5'-2"	C	19	22	23	25	3'-1"	B	16	19	21	22
	5.5	2'-2"	A	2'-6"	B	16	19	20	22	4'-9"	C	19	21	23	24	2'-10"	B	16	19	20	22
	6	2'-0"	A	2'-3"	B	16	19	20	21	4'-5"	C	20	21	23	24	2'-7"	B	16	19	20	21
	6.5	1'-10"	A	2'-1"	B	16	19	20	21	4'-1"	C	20	21	22	24	2'-5"	B	16	18	20	21
	7	1'-9"	A	1'-11"	B	16	18	20	21	3'-10"	C	20	21	22	23	2'-3"	B	16	18	20	21

TABLE 5.2 TRIBUTARY WIDTHS FOR SINGLE SPAN ATTACHED STRUCTURES

OVER-HANG (FT)	PROJECTION OF SINGLE SPAN STUCTURES (FT) 8'	9'	10'	11'	12'	13'	14'	15'	16'	17'	18'	19'	20'	21'	22'
0'	4'	4.5'	5'	5.5'	6'	6.5'	7'	7.5'	8'	8.5'	9'	9.5'	10'	10.5'	11'
1'	4.5'	5'	5.5'	6'	6.5'	7'	7.5'	8'	8.5'	9'	9.5'	10'	10.5'	11'	11.5'
2'	5'	5.5'	6'	6.5'	7'	7.5'	8'	8.5'	9'	9.5'	10'	10.5'	11'	11.5'	12'
3'	5.5'	6'	6.5'	7'	7.5'	8'	8.5'	9'	9.5'	10'	10.5'	11'	11.5'	12'	12.5'
4'	6'	6.5'	7'	7.5'	8'	8.5'	9'	9.5'	10'	10.5'	11'	11.5'	12'	12.5'	13'
5'	6.5'	7'	7.5'	8'	8.5'	9'	9.5'	10'	10.5'	11'	11.5'	12'	12.5'	13'	13.5'

TABLE 5.3 Post Requirements for Attached Structures

Post Description	Max Hgt	POST
Twin 0.062"x1.5"x1.5" ScrolL	9'	A
0.042"x3"x8" Aluminum Post	11'	B
0.024"Post with Sideplates	12'	B
Clover 0.032"x3"x3" Alum	12'	B
Clover 0.040"x3"x3" Alum	12'	B
Colonial 0.062" Extruded	12'	C
0.041"x3"x3" Steel Clover	12'	D
0.041"x3"x3" Steel Clover	8'	E
3/16"x3"x3" Steel Square	15'	F
3/16"x4"x4" Steel Square	18'	G
5/16"x4"x4" Steel Square	18'	H

TABLE 5.4 Post Requirements for Freestanding Structures

Post Description	Maximum Footing	Max Height	POST
0.041"x3"x3" Steel Clover	d = 23"	12'	D
0.041"x3"x3" Steel Clover	d = 23"	8'	E
3/16"x3"x3" Steel Square	d = 32"	15'	F
3/16"x4"x4" Steel Square	d = 38"	18'	G
5/16"x4"x4" Steel Square	d = 42"	18'	H

GENERAL INSTRUCTIONS FOR THESE TABLES

1. CHOOSE FREESTANDING OR ATTACHED STRUCTURE
2. CHOOSE PROJECTION, WIDTH AND OVERHANG OF UNIT
3. DETERMINE WIND AND LIVE OR SNOW LOAD OF STRUCTURE SITE (PATIO UNITS USE 10 PSF MIN, COMMERCIAL UNITS USE 20PSF MIN)
4. CHOOSE A PANEL FROM **TABLES 4.1** TO **4.8** THAT HAS ADEQUATE CLEARSPAN FOR YOUR NEEDS.
5. DETERMINE TRIBUTARY WIDTH FROM TABLE 5.2 OR CALCULATE FROM TRIBUTARY DIAGRAM ON**SC02 PAGE 2 OF 2**
6. CHOOSE A HEADER FROM TABLE 5.1 THAT HAS ADEQUATE POST SPACING.
7. USE THE APPROPRIATE FOOTER SIZE SHOWN.
8. FOR SINGLE SPAN ATTACHED UNIT USE THE POST SHOWN UPGRADE THE POST IF THE HEIGHT IS NOT SUFFICIENT FREESTANDING AND MULTISPAN UNITS USE TABLE 5.4
9. FIND THE O/C SPACING OR # OF FASTENERS FOR ATTACHING TO WALL FROM TABLE 7.5
10. USE THE APPROPRIATE DETAILS

FOR PATIO SLABS FOLLOW 1-6 FROM ABOVE THEN

SLAB 7. DETERMINE MAXIMUM POST SPACING ON SLAB FROM TABLE 5.1
SLAB 8. USE THE SMALLER OF THE POST SPACING ON SLAB OR HEADER POST SPACING
SLAB 9. FOLLOW **9-11** FROM ABOVE
SLAB 10. FOR **TWO** POST STRUCTURES USE **TABLE 7.1** ON SHEET **M3** FOR SLAB REQUIREMENTS INSTEAD OF THESE TABLES
SLAB11. CHECK TABLES **SLAB1** AND **SLAB2** ON **M5** FOR CORNER DISTANCE REQUIRMENTS.

Amerimax Building Products
5208 Tennyson Parkway
Plano, Texas 75024

Carl Putnam, P. E.
3441 Ivylink Place
Lynchburg, VA 24503
carlputnam@comcast.net

REGISTERED PROFESSIONAL ENGINEER
CARL PUTNAM
C 68139
EXP. 6/30/2009
CIVIL
STATE OF CALIFORNIA

4/27/2009

SOLID COVER 5.0 POST SPACINGS FOR PATIO AND COMMERCIAL COVERS 90 MPH WIND AREAS

TABLE 5.5

GROUND SNOW LOAD (PSF)	TRIB WIDTH (FT)	MAX POST SPACING ON SLAB (FT)	POST REQ'D FOR SLAB	12 Ga 3"x8" Steel C Beam (Detail T) MAX POST SPACING (FT)	MIN POST TYPE	FOOTER SIZE "d" (in)	Attached Structure MAX POST LENGTH 8' CONSTRAINED "d" (in)	12' "d" (in)	18' FOOTER "d" (in)	16 Ga 3"x8" Steel C Beam (Detail T) MAX POST SPACING (FT)	MIN POST TYPE	FOOTER SIZE "d" (in)	Attached Structure MAX POST LENGTH 8' CONSTRAINED "d" (in)	12' "d" (in)	18' FOOTER "d" (in)	Double 12 Ga 3"x8" Steel C Beam (T and AY) MAX POST SPACING (FT)	MIN POST TYPE	FOOTER SIZE "d" (in)	Attached Structure MAX POST LENGTH 8' CONSTRAINED "d" (in)	12' "d" (in)	18' FOOTER "d" (in)
90 MPH EXPOSURE B																					
10 LIVE	3	22'-8"	A	30'-0"	B	26	29	32	XX	26'-10"	B	25	28	31	XX	30'-0"	B	26	29	32	XX
	3.5	19'-5"	A	30'-0"	C	27	29	32	XX	24'-6"	B	25	28	31	XX	30'-0"	C	27	29	32	XX
	4	17'-0"	A	29'-9"	C	28	29	32	XX	22'-5"	B	26	27	30	XX	30'-0"	C	28	29	32	XX
	4.5	15'-1"	A	28'-8"	C	29	29	32	XX	20'-9"	C	26	27	30	XX	30'-0"	C	29	29	32	XX
	5	13'-7"	A	27'-9"	C	30	30	32	XX	19'-4"	C	26	26	29	XX	30'-0"	C	30	30	32	XX
	5.5	12'-4"	A	26'-11"	C	30	30	31	XX	18'-1"	C	26	26	29	XX	30'-0"	D	31	31	32	XX
	6	11'-4"	A	26'-2"	C	31	31	31	XX	17'-0"	C	27	27	28	XX	30'-0"	D	32	32	32	XX
	6.5	10'-5"	A	25'-6"	D	31	31	31	XX	16'-0"	C	27	27	28	XX	30'-0"	D	33	33	33	XX
	7	9'-8"	A	24'-11"	D	32	32	32	XX	15'-2"	C	27	27	28	XX	30'-0"	D	34	34	34	XX
	7.5	9'-1"	A	24'-4"	D	32	32	32	XX	14'-5"	C	27	27	27	XX	30'-0"	D	35	35	35	XX
	8	8'-6"	A	23'-10"	D	33	33	33	XX	13'-9"	C	27	27	27	XX	29'-9"	D	35	35	35	XX
	8.5	8'-0"	A	23'-5"	D	33	33	33	XX	13'-2"	C	28	28	28	XX	29'-2"	D	36	36	36	XX
	9	7'-6"	A	22'-11"	D	34	34	34	XX	12'-7"	C	28	28	28	XX	28'-8"	D	36	36	36	XX
	9.5	7'-2"	A	22'-2"	D	34	34	34	XX	12'-1"	C	28	28	28	XX	28'-2"	D	37	37	37	XX
	10	6'-9"	A	21'-5"	D	34	34	34	XX	11'-8"	C	28	28	28	XX	27'-9"	D	37	37	37	XX
	11	6'-2"	A	20'-2"	D	35	35	35	XX	10'-10"	C	28	28	28	XX	26'-11"	D	38	38	38	XX
	12	5'-8"	A	19'-1"	D	35	35	35	XX	10'-0"	C	28	28	28	XX	26'-2"	D	39	39	39	XX
	13	5'-2"	A	18'-1"	D	35	35	35	XX	9'-3"	C	28	28	28	XX	25'-6"	E	39	39	39	XX
90 MPH EXPOSURE C																					
10 LIVE	3	22'-8"	A	30'-0"	B	29	32	36	XX	25'-0"	B	28	31	34	XX	30'-0"	B	29	32	36	XX
	3.5	19'-5"	A	28'-11"	C	31	32	35	XX	23'-9"	B	29	30	34	XX	30'-0"	C	31	32	36	XX
	4	17'-0"	A	27'-8"	C	32	32	35	XX	22'-5"	B	29	30	33	XX	30'-0"	C	32	32	36	XX
	4.5	15'-1"	A	26'-8"	C	32	32	35	XX	20'-9"	C	30	30	33	XX	30'-0"	C	34	34	36	XX
	5	13'-7"	A	25'-10"	C	33	33	34	XX	19'-4"	C	30	30	32	XX	30'-0"	C	35	35	36	XX
	5.5	12'-4"	A	25'-0"	C	34	34	34	XX	18'-1"	C	30	30	32	XX	30'-0"	D	36	36	36	XX
	6	11'-4"	A	24'-4"	C	35	35	35	XX	17'-0"	C	31	31	31	XX	30'-0"	D	37	37	37	XX
	6.5	10'-5"	A	23'-9"	C	35	35	35	XX	16'-0"	C	31	31	31	XX	29'-7"	D	38	38	38	XX
	7	9'-8"	A	23'-2"	D	36	36	36	XX	15'-2"	C	31	31	31	XX	28'-11"	D	39	39	39	XX
	7.5	9'-1"	A	22'-8"	D	36	36	36	XX	14'-5"	C	31	31	31	XX	28'-3"	D	39	39	39	XX
	8	8'-6"	A	22'-2"	D	37	37	37	XX	13'-9"	C	31	31	31	XX	27'-8"	D	40	40	40	XX
	8.5	8'-0"	A	21'-9"	D	37	37	37	XX	13'-2"	C	32	32	32	XX	27'-2"	D	40	40	40	XX
	9	7'-6"	A	21'-4"	D	38	38	38	XX	12'-7"	C	32	32	32	XX	26'-8"	D	41	41	41	XX
	9.5	7'-2"	A	21'-0"	D	38	38	38	XX	12'-1"	C	32	32	32	XX	26'-3"	D	41	41	41	XX
	10	6'-9"	A	20'-7"	D	39	39	39	XX	11'-8"	C	32	32	32	XX	25'-10"	D	42	42	42	XX
	11	6'-2"	A	20'-0"	D	40	40	40	XX	10'-10"	C	32	32	32	XX	25'-0"	D	43	43	43	XX
	12	5'-8"	A	19'-1"	D	40	40	40	XX	10'-0"	C	32	32	32	XX	24'-4"	D	44	44	44	XX
	13	5'-2"	A	18'-1"	D	41	41	41	XX	9'-3"	C	32	32	32	XX	23'-9"	D	44	44	44	XX
90 MPH EXPOSURE B																					
20 LIVE	3	11'-10"	A	26'-10"	C	25	28	31	35	17'-8"	C	21	26	29	32	30'-0"	D	26	29	32	36
	3.5	10'-2"	A	25'-6"	D	25	28	31	35	15'-10"	C	22	25	28	31	30'-0"	D	27	29	32	36
	4	8'-11"	A	24'-5"	D	26	28	31	34	14'-4"	C	22	24	27	31	30'-0"	D	28	29	32	36
	4.5	7'-11"	A	23'-5"	D	27	27	30	34	13'-2"	C	22	24	27	30	29'-7"	D	29	29	32	36
	5	7'-1"	A	22'-2"	D	27	27	30	34	12'-2"	C	22	24	26	30	28'-6"	D	30	30	32	36
	5.5	6'-5"	A	20'-11"	D	28	28	30	33	11'-3"	C	23	23	26	29	27'-8"	D	30	30	32	35
	6	5'-11"	A	19'-9"	D	28	28	29	33	10'-7"	C	23	23	26	29	26'-10"	D	31	31	31	35
	6.5	5'-5"	A	18'-9"	D	28	28	29	33	9'-9"	C	23	23	25	29	26'-2"	D	32	32	32	35
	7	5'-1"	A	17'-10"	D	29	29	29	32	9'-1"	C	23	23	25	28	25'-6"	E	32	32	32	35
	7.5	4'-9"	A	17'-1"	D	29	29	29	32	8'-6"	C	23	23	24	28	24'-11"	E	33	33	33	35
	8	4'-5"	A	16'-4"	D	29	29	29	32	7'-11"	C	23	23	24	28	24'-5"	E	33	33	33	34
	8.5	4'-2"	A	15'-8"	D	29	29	29	31	7'-6"	C	23	23	24	27	23'-11"	E	34	34	34	34
	9	3'-11"	A	15'-1"	D	29	29	29	31	7'-1"	C	23	23	24	27	23'-5"	E	34	34	34	34
	9.5	3'-9"	A	14'-6"	D	29	29	29	31	6'-8"	C	23	23	23	27	23'-0"	E	34	34	34	34
	10	3'-6"	A	14'-0"	D	30	30	30	31	6'-4"	C	23	23	23	27	22'-6"	E	35	35	35	35
	11	3'-2"	A	13'-2"	D	30	30	30	30	5'-10"	C	23	23	23	26	20'-7"	E	35	35	35	35
	12	2'-11"	A	12'-4"	D	30	30	30	30	5'-4"	C	23	23	23	26	18'-11"	E	35	35	35	35
	13	2'-8"	A	11'-8"	D	30	30	30	30	4'-11"	C	23	23	23	26	17'-6"	E	35	35	35	35

TABLE 5.5

GROUND SNOW LOAD (PSF)	TRIB WIDTH (FT)	MAX POST SPACING ON SLAB (FT)	POST REQ'D FOR SLAB	12 Ga 3"x8" Steel C Beam (Detail T) MAX POST SPACING (FT)	MIN POST TYPE	FOOTER SIZE "d" (in)	Attached Structure MAX POST LENGTH 8' CONSTRAINED "d" (in)	12' "d" (in)	18' FOOTER "d" (in)	16 Ga 3"x8" Steel C Beam (Detail T) MAX POST SPACING (FT)	MIN POST TYPE	FOOTER SIZE "d" (in)	Attached Structure MAX POST LENGTH 8' CONSTRAINED "d" (in)	12' "d" (in)	18' FOOTER "d" (in)	Double 12 Ga 3"x8" Steel C Beam (T and A MAX POST SPACING (FT)	MIN POST TYPE	FOOTER SIZE "d" (in)	Attached Structure MAX POST LENGTH 8' CONSTRAINED "d" (in)	12' "d" (in)	18' FOOTER "d" (in)
90 MPH EXPOSURE B																					
30	3	8'-0"	A	24'-10"	D	24	28	31	35	15'-1"	C	20	25	28	31	30'-0"	D	26	29	32	36
	3.5	6'-10"	A	23'-7"	D	25	27	30	34	13'-6"	C	21	24	27	30	29'-9"	D	27	29	32	36
	4	6'-0"	A	22'-3"	D	25	27	30	34	12'-2"	C	21	24	26	30	28'-5"	D	28	29	32	36
	4.5	5'-4"	A	20'-8"	D	26	27	30	33	11'-1"	C	21	23	26	29	27'-4"	E	28	28	32	35
	5	4'-10"	A	19'-4"	D	26	26	29	33	10'-2"	C	21	23	25	29	26'-5"	E	29	29	31	35
	5.5	4'-4"	A	18'-2"	D	26	26	29	32	9'-3"	C	21	22	25	28	25'-7"	E	30	30	31	35
	6	4'-0"	A	17'-1"	D	27	27	28	32	8'-6"	C	21	22	24	28	24'-10"	E	30	30	31	35
	6.5	3'-8"	A	16'-3"	D	27	27	28	32	7'-10"	C	21	21	24	28	24'-2"	E	31	31	31	34
	7	3'-5"	A	15'-5"	D	27	27	28	31	7'-4"	C	21	21	24	27	23'-7"	E	31	31	31	34
	7.5	3'-2"	A	14'-9"	D	27	27	27	31	6'-10"	C	21	21	23	27	23'-1"	E	32	32	32	34
	8	3'-0"	A	14'-1"	D	28	28	28	31	6'-5"	C	21	21	23	27	22'-7"	E	32	32	32	34
	8.5	2'-10"	A	13'-6"	D	28	28	28	30	6'-0"	C	21	21	23	26	21'-4"	E	32	32	32	33
	9	2'-8"	A	12'-11"	E	28	28	28	30	5'-8"	C	21	21	23	26	20'-2"	E	32	32	32	33
	9.5	2'-6"	A	12'-6"	E	28	28	28	30	5'-5"	C	21	21	22	26	19'-2"	E	32	32	32	33
90 MPH EXPOSURE C																					
30	3	8'-0"	A	24'-10"	D	28	31	34	38	15'-1"	C	23	27	31	35	30'-0"	D	29	32	36	40
	3.5	6'-10"	A	23'-7"	D	29	30	34	38	13'-6"	C	24	27	30	34	29'-9"	D	31	32	36	40
	4	6'-0"	A	22'-3"	D	29	30	33	37	12'-2"	C	24	26	29	33	28'-5"	D	32	32	35	40
	4.5	5'-4"	A	20'-8"	D	30	30	33	37	11'-1"	C	24	26	29	33	27'-4"	E	33	33	35	39
	5	4'-10"	A	19'-4"	D	30	30	32	36	10'-2"	C	24	25	28	32	26'-5"	E	33	33	35	39
	5.5	4'-4"	A	18'-2"	D	30	30	32	36	9'-3"	C	24	25	28	32	25'-7"	E	34	34	34	39
	6	4'-0"	A	17'-1"	D	31	31	31	35	8'-6"	C	24	24	27	31	24'-10"	E	35	35	35	38
	6.5	3'-8"	A	16'-3"	D	31	31	31	35	7'-10"	C	24	24	27	31	24'-2"	E	35	35	35	38
	7	3'-5"	A	15'-5"	D	31	31	31	35	7'-4"	C	24	24	26	30	23'-7"	E	36	36	36	38
	7.5	3'-2"	A	14'-9"	D	31	31	31	34	6'-10"	C	24	24	26	30	23'-1"	E	37	37	37	38
	8	3'-0"	A	14'-1"	D	32	32	32	34	6'-5"	C	24	24	26	30	22'-7"	E	37	37	37	38
	8.5	2'-10"	A	13'-6"	D	32	32	32	34	6'-0"	C	24	24	25	29	21'-4"	E	37	37	37	37
	9	2'-8"	A	12'-11"	E	32	32	32	34	5'-8"	C	24	24	25	29	20'-2"	E	37	37	37	37
	9.5	2'-6"	A	12'-6"	E	32	32	32	33	5'-5"	C	24	24	25	29	19'-2"	E	37	37	37	37
90 MPH EXPOSURE C																					
40	3	6'-1"	A	22'-5"	D	27	30	33	38	12'-3"	C	22	26	29	33	28'-5"	D	29	32	35	40
	3.5	5'-2"	A	20'-4"	D	27	29	33	37	10'-11"	C	22	26	28	32	27'-0"	E	30	31	35	39
	4	4'-6"	A	18'-8"	D	28	29	32	36	9'-8"	C	22	25	28	32	25'-10"	E	31	31	35	39
	4.5	4'-0"	A	17'-3"	D	28	28	31	36	8'-7"	C	22	24	27	31	24'-10"	E	32	32	34	38
	5	3'-7"	A	16'-1"	D	28	28	31	35	7'-9"	C	22	24	27	31	24'-0"	E	32	32	34	38
	5.5	3'-3"	A	15'-1"	D	29	29	31	35	7'-1"	C	22	23	26	30	23'-3"	E	33	33	34	38
	6	3'-0"	A	14'-2"	D	29	29	30	34	6'-6"	C	22	23	26	30	22'-7"	E	34	34	34	38
	6.5	2'-9"	A	13'-5"	D	29	29	30	34	6'-0"	C	22	22	25	29	21'-2"	E	34	34	34	37
	7	2'-7"	A	12'-9"	E	29	29	29	33	5'-7"	C	22	22	25	29	19'-8"	E	34	34	34	37
	7.5	2'-5"	A	12'-1"	E	30	30	30	33	5'-2"	C	22	22	25	29	18'-5"	E	34	34	34	36
	8	2'-3"	A	11'-7"	E	30	30	30	33	4'-10"	C	22	22	24	28	17'-4"	E	34	34	34	36
	8.5	2'-1"	A	11'-1"	E	30	30	30	33	4'-7"	C	22	22	24	28	16'-4"	E	34	34	34	35
	9	2'-0"	A	10'-7"	E	30	30	30	32	4'-4"	C	22	22	24	28	15'-5"	E	34	34	34	35
90 MPH EXPOSURE B																					
40	3	6'-1"	A	22'-5"	D	23	27	30	34	12'-3"	C	19	24	26	30						
	3.5	5'-2"	A	20'-4"	D	24	26	29	33	10'-11"	C	19	23	26	29						
	4	4'-6"	A	18'-8"	D	24	26	29	33	9'-8"	C	19	22	25	29						
	4.5	4'-0"	A	17'-3"	D	24	26	28	32	8'-7"	C	19	22	24	28						
	5	3'-7"	A	16'-1"	D	25	25	28	32	7'-9"	C	19	21	24	28						
	5.5	3'-3"	A	15'-1"	D	25	25	28	31	7'-1"	C	19	21	24	27						
	6	3'-0"	A	14'-2"	D	25	25	27	31	6'-6"	C	19	21	23	27						
	6.5	2'-9"	A	13'-5"	D	25	25	27	30	6'-0"	C	19	20	23	26						
	7	2'-7"	A	12'-9"	E	25	25	27	30	5'-7"	C	19	20	22	26						
	7.5	2'-5"	A	12'-1"	E	26	26	26	30	5'-2"	C	19	20	22	26						
	8	2'-3"	A	11'-7"	E	26	26	26	30	4'-10"	C	19	19	22	26						
	8.5	2'-1"	A	11'-1"	E	26	26	26	29	4'-7"	C	19	19	22	25						
	9	2'-0"	A	10'-7"	E	26	26	26	29	4'-4"	C	19	19	21	25						

4/27/2009

SOLID COVER 5.0 POST SPACINGS FOR PATIO AND COMMERCIAL COVERS 90 MPH WIND AREAS

TABLE 5.5

GROUND SNOW LOAD (PSF)	TRIB WIDTH (FT)	MAX POST SPACING ON SLAB (FT)	POST REQ'D FOR SLAB	12 Ga 3"x8" Steel C Beam (Detail T) MAX POST SPACING (FT)	MIN POST TYPE	FOOTER SIZE "d" (in)	Attached Structure MAX POST LENGTH 8' CONSTRAINED FOOTER "d" (in)	12' "d" (in)	18' "d" (in)	Freestanding or Multispan Units MAX POST LENGTH 8' CONSTRAINED FOOTER "d" (in)	12' "d" (in)	18' "d" (in)	16 Ga 3"x8" Steel C Beam (Detail T) MAX POST SPACING (FT)	MIN POST TYPE	FOOTER SIZE "d" (in)	Attached Structure MAX POST LENGTH 8' CONSTRAINED FOOTER "d" (in)	12' "d" (in)	18' "d" (in)	Freestanding or Multispan Units MAX POST LENGTH 8' CONSTRAINED FOOTER "d" (in)	12' "d" (in)	18' "d" (in)	Double 12 Ga 3"x8" Steel C Beam (T and AY) MAX POST SPACING (FT)	MIN POST TYPE	FOOTER SIZE "d" (in)	Attached Structure MAX POST LENGTH 8' CONSTRAINED FOOTER "d" (in)	12' "d" (in)	18' "d" (in)	Freestanding or Multispan Units MAX POST LENGTH 8' CONSTRAINED FOOTER "d" (in)	12' "d" (in)	18' "d" (in)
90 MPH EXPOSURE C																															
20 LIVE	3	11'-10"	A	26'-10"	C	28	31	35	39	17'-8"	C	25	28	32	36	30'-0"	D	29	32	36	40
	3.5	10'-2"	A	25'-6"	D	29	31	34	39	15'-10"	C	25	28	31	35	30'-0"	D	31	32	36	40
	4	8'-11"	A	24'-5"	D	30	31	34	38	14'-4"	C	25	27	30	34	30'-0"	D	32	32	36	40
	4.5	7'-11"	A	23'-5"	D	31	31	34	38	13'-2"	C	26	27	30	34	29'-7"	D	33	33	36	40
	5	7'-1"	A	22'-2"	D	32	32	33	37	12'-2"	C	26	26	29	33	28'-6"	D	34	34	35	40
	5.5	6'-5"	A	20'-11"	D	32	32	33	37	11'-3"	C	26	26	29	33	27'-8"	D	35	35	35	39
	6	5'-11"	A	19'-9"	D	32	32	32	37	10'-7"	C	26	26	28	32	26'-10"	D	36	36	36	39
	6.5	5'-5"	A	18'-9"	D	33	33	33	36	9'-9"	C	26	26	28	32	26'-2"	D	36	36	36	39
	7	5'-1"	A	17'-10"	D	33	33	33	36	9'-1"	C	26	26	27	31	25'-6"	E	37	37	37	39
	7.5	4'-9"	A	17'-1"	D	33	33	33	35	8'-6"	C	26	26	27	31	24'-11"	E	38	38	38	38
	8	4'-5"	A	16'-4"	D	33	33	33	35	7'-11"	C	26	26	27	31	24'-5"	E	38	38	38	38
	8.5	4'-2"	A	15'-8"	D	34	34	34	35	7'-6"	C	26	26	26	30	23'-11"	E	39	39	39	39
	9	3'-11"	A	15'-1"	D	34	34	34	35	7'-1"	C	26	26	26	30	23'-5"	E	39	39	39	39
	9.5	3'-9"	A	14'-6"	D	34	34	34	34	6'-8"	C	26	26	26	30	23'-0"	E	40	40	40	40
	10	3'-6"	A	14'-0"	D	34	34	34	34	6'-4"	C	26	26	26	30	22'-6"	E	40	40	40	40
	11	3'-2"	A	13'-2"	D	34	34	34	34	5'-10"	C	26	26	26	29	20'-7"	E	40	40	40	40
90 MPH EXPOSURE B																					
25	3	9'-7"	A	26'-5"	D	24	28	31	35	17'-1"	C	21	25	28	32	30'-0"	D	26	29	32	36
	3.5	8'-2"	A	25'-1"	D	25	28	31	35	15'-4"	C	22	25	28	31	30'-0"	D	27	29	32	36
	4	7'-2"	A	24'-0"	D	26	28	31	34	13'-10"	C	22	24	27	31	30'-0"	D	28	29	32	36
	4.5	6'-4"	A	23'-0"	D	27	27	30	34	12'-8"	C	22	24	27	30	29'-1"	D	29	29	32	36
	5	5'-9"	A	21'-7"	D	27	27	30	34	11'-9"	C	22	23	26	30	28'-1"	E	30	30	32	36
	5.5	5'-2"	A	20'-3"	D	27	27	29	33	10'-11"	C	22	23	26	29	27'-2"	E	30	30	31	35
	6	4'-9"	A	19'-2"	D	28	28	29	33	10'-1"	C	22	23	25	29	26'-5"	E	31	31	31	35
	6.5	4'-5"	A	18'-2"	D	28	28	29	32	9'-4"	C	22	22	25	28	25'-9"	E	31	31	31	35
	7	4'-1"	A	17'-4"	D	28	28	28	32	8'-8"	C	22	22	24	28	25'-1"	E	32	32	32	35
	7.5	3'-10"	A	16'-7"	D	28	28	28	32	8'-1"	C	22	22	24	28	24'-6"	E	32	32	32	34
	8	3'-7"	A	15'-10"	D	29	29	29	31	7'-7"	C	22	22	24	27	24'-0"	E	33	33	33	34
	8.5	3'-4"	A	15'-2"	D	29	29	29	31	7'-2"	C	22	22	24	27	23'-6"	E	33	33	33	34
	9	3'-2"	A	14'-7"	D	29	29	29	31	6'-9"	C	22	22	23	27	23'-1"	E	34	34	34	34
	9.5	3'-0"	A	14'-1"	D	29	29	29	31	6'-5"	C	22	22	23	27	22'-7"	E	34	34	34	34
90 MPH EXPOSURE C																					
25	3	9'-7"	A	26'-5"	D	28	31	35	39	17'-1"	C	24	28	31	35	30'-0"	D	29	32	36	40
	3.5	8'-2"	A	25'-1"	D	29	31	34	38	15'-4"	C	25	28	31	35	30'-0"	D	31	32	36	40
	4	7'-2"	A	24'-0"	D	30	31	34	38	13'-10"	C	25	27	30	34	30'-0"	D	32	32	36	40
	4.5	6'-4"	A	23'-0"	D	31	31	34	38	12'-8"	C	25	26	29	33	29'-1"	D	33	33	35	40
	5	5'-9"	A	21'-7"	D	31	31	33	37	11'-9"	C	25	26	29	33	28'-1"	E	34	34	35	39
	5.5	5'-2"	A	20'-3"	D	32	32	33	37	10'-11"	C	26	26	28	32	27'-2"	E	35	35	35	39
	6	4'-9"	A	19'-2"	D	32	32	32	36	10'-1"	C	26	26	28	32	26'-5"	E	35	35	35	39
	6.5	4'-5"	A	18'-2"	D	32	32	32	36	9'-4"	C	26	26	28	32	25'-9"	E	36	36	36	39
	7	4'-1"	A	17'-4"	D	32	32	32	36	8'-8"	C	26	26	27	31	25'-1"	E	37	37	37	38
	7.5	3'-10"	A	16'-7"	D	33	33	33	35	8'-1"	C	26	26	27	31	24'-6"	E	37	37	37	38
	8	3'-7"	A	15'-10"	D	33	33	33	35	7'-7"	C	26	26	26	30	24'-0"	E	38	38	38	38
	8.5	3'-4"	A	15'-2"	D	33	33	33	35	7'-2"	C	26	26	26	30	23'-6"	E	38	38	38	38
	9	3'-2"	A	14'-7"	D	33	33	33	34	6'-9"	C	26	26	26	30	23'-1"	E	39	39	39	39
	9.5	3'-0"	A	14'-1"	D	34	34	34	34	6'-5"	C	26	26	26	30	22'-7"	E	39	39	39	39
	10	2'-10"	A	13'-7"	D	34	34	34	34	6'-1"	C	26	26	26	29	21'-6"	E	39	39	39	39

TABLE 5.5

GROUND SNOW LOAD (PSF)	TRIB WIDTH (FT)	MAX POST SPACING ON SLAB (FT)	POST REQ'D FOR SLAB	12 Ga 3"x8" Steel C Beam (Detail T) MAX POST SPACING (FT)	MIN POST TYPE	FOOTER SIZE "d" (in)	Attached Structure MAX POST LENGTH 8' CONSTRAINED FOOTER "d" (in)	12' "d" (in)	18' "d" (in)	Freestanding or Multispan Units MAX POST LENGTH 8' CONSTRAINED FOOTER "d" (in)	12' "d" (in)	18' "d" (in)	16 Ga 3"x8" Steel C Beam (Detail T) MAX POST SPACING (FT)	MIN POST TYPE	FOOTER SIZE "d" (in)	Attached Structure MAX POST LENGTH 8' CONSTRAINED FOOTER "d" (in)	12' "d" (in)	18' "d" (in)	Freestanding or Multispan Units MAX POST LENGTH 8' CONSTRAINED FOOTER "d" (in)	12' "d" (in)	18' "d" (in)	Double 12 Ga 3"x8" Steel C Beam (T and A MAX POST SPACING (FT)	MIN POST TYPE	FOOTER SIZE "d" (in)	Attached Structure MAX POST LENGTH 8' CONSTRAINED FOOTER "d" (in)	12' "d" (in)	18' "d" (in)	Freestanding or Multispan Units MAX POST LENGTH 8' CONSTRAINED FOOTER "d" (in)	12' "d" (in)	18' "d" (in)
90 MPH EXPOSURE B																															
60	3	4'-1"	A	17'-5"	D	21	26	28	32	8'-8"	C	17	22	25	28	24'-10"	E	24	28	31	35
	3.5	3'-6"	A	15'-8"	D	22	25	28	31	7'-6"	C	17	21	24	27	23'-7"	E	25	27	30	34
	4	3'-0"	A	14'-4"	D	22	24	27	31	6'-7"	C	17	21	23	27	22'-7"	E	26	27	30	34
	4.5	2'-8"	A	13'-2"	E	22	24	27	30	5'-10"	C	17	20	23	26	20'-8"	E	26	27	30	33
	5	2'-5"	A	12'-3"	E	22	24	26	30	5'-3"	C	17	20	22	26	18'-8"	E	26	26	29	33
	5.5	2'-2"	A	11'-5"	E	23	23	26	30	4'-9"	C	17	19	22	26	17'-0"	E	26	26	28	32
	6	2'-0"	A	10'-8"	E	23	23	26	29	4'-4"	C	17	19	22	25	15'-7"	E	26	26	28	31
	6.5	1'-10"	A	10'-1"	E	23	23	25	29	4'-0"	C	17	19	21	25	14'-5"	E	26	26	27	31
	7	1'-9"	A	9'-7"	E	23	23	25	29	3'-9"	C	17	18	21	25	13'-5"	E	26	26	27	30
	7.5	1'-7"	A	9'-1"	E	23	23	25	28	3'-6"	C	17	18	21	24	12'-7"	E	26	26	26	30
	8	1'-6"	A	8'-8"	E	23	23	24	28	3'-3"	C	17	18	20	24	11'-10"	E	26	26	26	30
	8.5	1'-5"	A	8'-3"	E	24	24	24	28	3'-1"	C	17	18	20	24	11'-1"	E	26	26	26	29
90 MPH EXPOSURE C																					
60	3	4'-1"	A	17'-5"	D	25	28	32	36	8'-8"	C	19	24	27	31	24'-10"	E	28	31	34	38
	3.5	3'-6"	A	15'-8"	D	25	28	31	35	7'-6"	C	19	23	26	30	23'-7"	E	29	30	34	38
	4	3'-0"	A	14'-4"	D	25	27	30	34	6'-7"	C	20	23	26	30	22'-7"	E	29	30	33	38
	4.5	2'-8"	A	13'-2"	E	26	27	30	34	5'-10"	C	20	22	25	29	20'-8"	E	30	30	33	37
	5	2'-5"	A	12'-3"	E	26	26	29	33	5'-3"	C	20	22	25	29	18'-8"	E	30	30	32	36
	5.5	2'-2"	A	11'-5"	E	26	26	29	33	4'-9"	C	20	21	24	28	17'-0"	E	30	30	31	35
	6	2'-0"	A	10'-8"	E	26	26	28	32	4'-4"	C	20	21	24	28	15'-7"	E	30	30	31	35
	6.5	1'-10"	A	10'-1"	E	26	26	28	32	4'-0"	C	20	21	24	28	14'-5"	E	30	30	30	34
	7	1'-9"	A	9'-7"	E	27	27	28	32	3'-9"	C	20	20	23	27	13'-5"	E	30	30	30	34

TABLE 5.2 TRIBUTARY WIDTHS FOR SINGLE SPAN ATTACHED STRUCTURES

OVER-HANG (FT)	PROJECTION OF SINGLE SPAN STUCTURES (FT) 8'	9'	10'	11'	12'	13'	14'	15'	16'	17'	18'	19'	20'	21'	22'
0'	4'	4.5'	5'	5.5'	6'	6.5'	7'	7.5'	8'	8.5'	9'	9.5'	10'	10.5'	11'
1'	4.5'	5'	5.5'	6'	6.5'	7'	7.5'	8'	8.5'	9'	9.5'	10'	10.5'	11'	11.5'
2'	5'	5.5'	6'	6.5'	7'	7.5'	8'	8.5'	9'	9.5'	10'	10.5'	11'	11.5'	12'
3'	5.5'	6'	6.5'	7'	7.5'	8'	8.5'	9'	9.5'	10'	10.5'	11'	11.5'	12'	12.5'
4'	6'	6.5'	7'	7.5'	8'	8.5'	9'	9.5'	10'	10.5'	11'	11.5'	12'	12.5'	13'
5'	6.5'	7'	7.5'	8'	8.5'	9'	9.5'	10'	10.5'	11'	11.5'	12'	12.5'	13'	13.5'

TABLE 5.3 Post Requirements for Attached Structures

Post Description	Max Hgt	POST
Twin 0.062"x1.5"x1.5" ScrolL	9'	A
0.042"x3"x8" Aluminum Post	11'	B
0.024"Post with Sideplates	12'	B
Clover 0.032"x3"x3" Alum	12'	B
Clover 0.040"x3"x3" Alum	12'	B
Colonial 0.062" Extruded	12'	C
0.041"x3"x3" Steel Clover	12'	D
0.041"x3"x3" Steel Clover	8'	E
3/16"x3"x3" Steel Square	15'	F
3/16"x4"x4" Steel Square	18'	G
5/16"x4"x4" Steel Square	18'	H

TABLE 5.4 Post Requirements for Freestanding Structures

Post Description	Maximum Footing	Max Height	POST
0.041"x3"x3" Steel Clover	d = 23"	12'	D
0.041"x3"x3" Steel Clover	d = 23"	8'	E
3/16"x3"x3" Steel Square	d = 32"	15'	F
3/16"x4"x4" Steel Square	d = 38"	18'	G
5/16"x4"x4" Steel Square	d = 42"	18'	H

GENERAL INSTRUCTIONS FOR THESE TABLES

1. CHOOSE FREESTANDING OR ATTACHED STRUCTURE
2. CHOOSE PROJECTION, WIDTH AND OVERHANG OF UNIT
3. DETERMINE WIND AND LIVE OR SNOW LOAD OF STRUCTURE SITE (PATIO UNITS USE 10 PSF MIN, COMMERCIAL UNITS USE 20PSF MIN)
4. CHOOSE A PANEL FROM **TABLES 4.1** TO **4.8** THAT HAS ADEQUATE CLEARSPAN FOR YOUR NEEDS.
5. DETERMINE TRIBUTARY WIDTH FROM TABLE 5.2 OR CALCULATE FROM TRIBUTARY DIAGRAM ON**SC02 PAGE 2 OF 2**
6. CHOOSE A HEADER FROM TABLE 5.5 THAT HAS ADEQUATE POST SPACING.
7. USE THE APPROPRIATE FOOTER SIZE SHOWN.
8. FOR SINGLE SPAN ATTACHED UNIT USE THE POST SHOWN UPGRADE THE POST IF THE HEIGHT IS NOT SUFFICIENT FREESTANDING AND MULTISPAN UNITS USE TABLE 5.4
9. FIND THE O/C SPACING OR # OF FASTENERS FOR ATTACHING TO WALL FROM TABLE 7.5
10. USE THE APPROPRIATE DETAILS

FOR PATIO SLABS FOLLOW 1-6 FROM ABOVE THEN

SLAB 7. DETERMINE MAXIMUM POST SPACING ON SLAB FROM TABLE 5.5
SLAB 8. USE THE SMALLER OF THE POST SPACING ON SLAB OR HEADER POST SPACING
SLAB 9. FOLLOW **9-11** FROM ABOVE
SLAB 10. FOR **TWO** POST STRUCTURES USE **TABLE 7.1** ON SHEET **M3** FOR SLAB REQUIREMENTS INSTEAD OF THESE TABLES
SLAB11. CHECK TABLES **SLAB1** AND **SLAB2** ON **M5** FOR CORNER DISTANCE REQUIRMENTS.

Amerimax Building Products
5208 Tennyson Parkway
Plano, Texas 75024

Carl Putnam, P. E.
3441 Ivylink Place
Lynchburg, VA 24503
carlputnam@comcast.net

REGISTERED PROFESSIONAL ENGINEER
CARL PUTNAM
C 68139
EXP. 6/30/2009
CIVIL
STATE OF CALIFORNIA

4/27/2009

SOLID COVER 5.0 POST SPACINGS FOR PATIO AND COMMERCIAL COVERS 90 MPH WIND AREAS

TABLE 5.6

GROUND SNOW LOAD (PSF)	TRIB WIDTH (FT)	MAX POST SPACING ON SLAB (FT)	POST REQ'D FOR SLAB	6.5" Roll Formed Fascia (Detail E) MAX POST SPACING (FT)	Attached Structure MIN POST TYPE	Attached Structure FOOTER SIZE "d" (in)	Freestanding or Multispan Units MAX POST LENGTH CONSTRAINED FOOTER 8' "d" (in)	10' "d" (in)	12' "d" (in)	California Extruded Fascia (Detail G) MAX POST SPACING (FT)	Attached Structure MIN POST TYPE	Attached Structure FOOTER SIZE "d" (in)	Freestanding or Multispan Units MAX POST LENGTH CONSTRAINED FOOTER 8' "d" (in)	10' "d" (in)	12' "d" (in)	Classic Extruded Fascia (Detail H) MAX POST SPACING (FT)	Attached Structure MIN POST TYPE	Attached Structure FOOTER SIZE "d" (in)	Freestanding or Multispan Units MAX POST LENGTH CONSTRAINED FOOTER 8' "d" (in)	10' "d" (in)	12' "d" (in)
90 MPH EXPOSURE B																					
10 LIVE	3	22'-8"	A	12'-4"	A	19	21	23	24	14'-6"	A	20	21	22	23	17'-10"	A	22	23	24	25
	3.5	19'-5"	A	11'-0"	A	19	21	22	23	13'-9"	A	21	21	22	23	17'-3"	A	22	22	24	25
	4	17'-0"	A	9'-11"	A	19	20	22	23	13'-2"	A	21	21	21	23	16'-6"	A	23	23	24	25
	4.5	15'-1"	A	9'-0"	A	20	20	21	23	12'-8"	A	22	22	22	23	15'-10"	B	24	24	24	25
	5	13'-7"	A	8'-4"	A	20	20	21	22	12'-2"	A	22	22	22	22	15'-4"	B	24	24	24	24
	5.5	12'-4"	A	7'-8"	A	20	20	21	22	11'-7"	A	23	23	23	23	14'-10"	B	25	25	25	25
	6	11'-4"	A	7'-2"	A	20	20	20	22	11'-0"	A	23	23	23	23	14'-5"	B	25	25	25	25
	6.5	10'-5"	A	6'-8"	A	20	20	20	21	10'-7"	B	23	23	23	23	14'-0"	B	26	26	26	26
	7	9'-8"	A	6'-3"	A	20	20	20	21	10'-2"	B	24	24	24	24	13'-8"	C	26	26	26	26
	7.5	9'-1"	A	5'-11"	A	20	20	20	21	9'-9"	B	24	24	24	24	13'-4"	C	27	27	27	27
	8	8'-6"	A	5'-7"	A	20	20	20	21	9'-5"	B	24	24	24	24	13'-1"	C	27	27	27	27
	8.5	8'-0"	A	5'-4"	A	20	20	20	21	9'-2"	B	24	24	24	24	12'-10"	C	27	27	27	27
	9	7'-6"	A	5'-0"	A	20	20	20	20	8'-10"	B	25	25	25	25	12'-7"	C	28	28	28	28
	9.5	7'-2"	A	4'-10"	A	20	20	20	20	8'-7"	B	25	25	25	25	12'-4"	C	28	28	28	28
	10	6'-9"	A	4'-7"	A	20	20	20	20	8'-4"	B	25	25	25	25	12'-2"	C	28	28	28	28
	11	6'-2"	A	4'-2"	A	21	21	21	21	7'-11"	B	25	25	25	25	11'-9"	C	29	29	29	29
	12	5'-8"	A	3'-11"	A	21	21	21	21	7'-7"	B	26	26	26	26	11'-5"	C	29	29	29	29
	13	5'-2"	A	3'-7"	A	21	21	21	21	7'-3"	C	26	26	26	26	11'-1"	C	30	30	30	30
90 MPH EXPOSURE C																					
10 LIVE	3	22'-8"	A	12'-4"	A	22	24	25	27	13'-5"	A	22	22	24	25	16'-9"	A	24	25	26	28
	3.5	19'-5"	A	11'-0"	A	22	23	25	26	12'-9"	A	23	23	24	25	15'-11"	A	25	25	26	27
	4	17'-0"	A	9'-11"	A	22	23	24	25	12'-2"	A	24	24	24	25	15'-2"	A	26	26	26	27
	4.5	15'-1"	A	9'-0"	A	23	23	24	25	11'-8"	A	25	25	25	25	14'-7"	A	26	26	26	27
	5	13'-7"	A	8'-4"	A	23	23	23	25	11'-3"	A	25	25	25	25	14'-1"	B	27	27	27	27
	5.5	12'-4"	A	7'-8"	A	23	23	23	24	10'-11"	A	26	26	26	26	13'-8"	B	28	28	28	28
	6	11'-4"	A	7'-2"	A	23	23	23	24	10'-7"	A	26	26	26	26	13'-3"	B	28	28	28	28
	6.5	10'-5"	A	6'-8"	A	23	23	23	24	10'-4"	A	27	27	27	27	12'-11"	B	29	29	29	29
	7	9'-8"	A	6'-3"	A	23	23	23	23	10'-1"	B	27	27	27	27	12'-7"	B	29	29	29	29
	7.5	9'-1"	A	5'-11"	A	23	23	23	23	9'-9"	B	27	27	27	27	12'-4"	C	30	30	30	30
	8	8'-6"	A	5'-7"	A	23	23	23	23	9'-5"	B	28	28	28	28	12'-1"	C	30	30	30	30
	8.5	8'-0"	A	5'-4"	A	23	23	23	23	9'-2"	B	28	28	28	28	11'-10"	C	31	31	31	31
	9	7'-6"	A	5'-0"	A	23	23	23	23	8'-10"	B	28	28	28	28	11'-7"	C	31	31	31	31
	9.5	7'-2"	A	4'-10"	A	23	23	23	23	8'-7"	B	28	28	28	28	11'-5"	C	31	31	31	31
	10	6'-9"	A	4'-7"	A	24	24	24	24	8'-4"	B	29	29	29	29	11'-2"	C	32	32	32	32
	11	6'-2"	A	4'-2"	A	24	24	24	24	7'-11"	B	29	29	29	29	10'-10"	C	32	32	32	32
	12	5'-8"	A	3'-11"	A	24	24	24	24	7'-7"	B	30	30	30	30	10'-6"	C	33	33	33	33
	13	5'-2"	A	3'-7"	A	24	24	24	24	7'-3"	C	30	30	30	30	10'-3"	C	34	34	34	34
90 MPH EXPOSURE B																					
20 LIVE	3	11'-10"	A	7'-6"	A	16	19	21	22	11'-4"	A	19	20	21	22	14'-5"	B	20	22	23	24
	3.5	10'-2"	A	6'-7"	A	16	19	20	21	10'-6"	B	19	19	21	22	13'-8"	B	21	21	23	24
	4	8'-11"	A	5'-10"	A	16	18	20	21	9'-9"	B	19	19	20	21	13'-1"	C	21	21	22	24
	4.5	7'-11"	A	5'-3"	A	16	18	19	21	9'-2"	B	20	20	20	21	12'-7"	C	22	22	22	23
	5	7'-1"	A	4'-10"	A	17	18	19	20	8'-7"	B	20	20	20	21	12'-2"	C	22	22	22	23
	5.5	6'-5"	A	4'-5"	A	17	18	19	20	8'-2"	B	20	20	20	21	11'-9"	C	23	23	23	23
	6	5'-11"	A	4'-1"	A	17	17	19	20	7'-9"	B	21	21	21	21	11'-5"	C	23	23	23	23
	6.5	5'-5"	A	3'-9"	A	17	17	18	20	7'-5"	C	21	21	21	21	11'-1"	C	24	24	24	24
	7	5'-1"	A	3'-6"	A	17	17	18	19	7'-2"	C	21	21	21	21	10'-10"	C	24	24	24	24
	7.5	4'-9"	A	3'-4"	A	17	17	18	19	6'-10"	C	21	21	21	21	10'-7"	C	25	25	25	25
	8	4'-5"	A	3'-1"	A	17	17	18	19	6'-7"	C	21	21	21	21	10'-4"	C	25	25	25	25
	8.5	4'-2"	A	2'-11"	A	17	17	18	19	6'-5"	C	22	22	22	22	10'-2"	D	25	25	25	25
	9	3'-11"	A	2'-9"	A	17	17	18	19	6'-2"	C	22	22	22	22	10'-0"	D	26	26	26	26
	9.5	3'-9"	A	2'-8"	A	17	17	17	19	6'-0"	C	22	22	22	22	9'-9"	D	26	26	26	26
	10	3'-6"	A	2'-6"	A	17	17	17	19	5'-10"	C	22	22	22	22	9'-7"	D	26	26	26	26
	11	3'-2"	A	2'-4"	A	17	17	18	19	5'-6"	C	22	22	22	22	9'-2"	D	27	27	27	27
	12	2'-11"	A	2'-1"	A	17	17	18	19	5'-2"	C	23	23	23	23	8'-9"	D	27	27	27	27
	13	2'-8"	A	1'-11"	A	17	17	18	19	4'-11"	C	23	23	23	23	8'-5"	D	27	27	27	27

TABLE 5.6

GROUND SNOW LOAD (PSF)	TRIB WIDTH (FT)	MAX POST SPACING ON SLAB (FT)	POST REQ'D FOR SLAB	6.5" Roll Formed Fascia (Detail E) MAX POST SPACING (FT)	Attached Structure MIN POST TYPE	Attached Structure FOOTER SIZE "d" (in)	Freestanding or Multispan Units MAX POST LENGTH CONSTRAINED FOOTER 8' "d" (in)	10' "d" (in)	12' "d" (in)	California Extruded Fascia (Detail G) MAX POST SPACING (FT)	Attached Structure MIN POST TYPE	Attached Structure FOOTER SIZE "d" (in)	Freestanding or Multispan Units MAX POST LENGTH CONSTRAINED FOOTER 8' "d" (in)	10' "d" (in)	12' "d" (in)	Classic Extruded Fascia (Detail H) MAX POST SPACING (FT)	Attached Structure MIN POST TYPE	Attached Structure FOOTER SIZE "d" (in)	Freestanding or Multispan Units MAX POST LENGTH CONSTRAINED FOOTER 8' "d" (in)	10' "d" (in)	12' "d" (in)
90 MPH EXPOSURE B																					
30	3	8'-0"	A	6'-3"	A	15	19	20	21	10'-1"	B	18	19	20	22	13'-4"	C	20	21	23	24
	3.5	6'-10"	A	5'-5"	A	15	18	19	21	9'-4"	C	18	19	20	21	12'-8"	C	20	21	22	23
	4	6'-0"	A	4'-10"	A	15	18	19	20	8'-8"	C	19	19	20	21	12'-1"	C	21	21	22	23
	4.5	5'-4"	A	4'-4"	A	15	17	19	20	8'-1"	C	19	19	20	21	11'-8"	C	21	21	22	23
	5	4'-10"	A	3'-11"	A	15	17	18	20	7'-8"	C	19	19	19	21	11'-3"	C	22	22	22	23
	5.5	4'-4"	A	3'-7"	A	15	17	18	19	7'-3"	C	19	19	19	20	10'-11"	D	22	22	22	23
	6	4'-0"	A	3'-4"	A	16	17	18	19	6'-11"	C	20	20	20	20	10'-7"	D	23	23	23	23
	6.5	3'-8"	A	3'-1"	A	16	17	18	19	6'-7"	C	20	20	20	20	10'-3"	D	23	23	23	23
	7	3'-5"	A	2'-10"	A	16	16	18	19	6'-3"	C	20	20	20	20	10'-0"	D	24	24	24	24
	7.5	3'-2"	A	2'-8"	A	16	16	18	19	6'-0"	C	20	20	20	20	9'-10"	D	24	24	24	24
	8	3'-0"	A	2'-6"	A	16	16	17	19	5'-10"	C	21	21	21	21	9'-7"	D	24	24	24	24
	8.5	2'-10"	A	2'-5"	A	16	16	17	18	5'-7"	C	21	21	21	21	9'-4"	D	25	25	25	25
	9	2'-8"	A	2'-3"	A	16	16	17	18	5'-5"	C	21	21	21	21	9'-1"	D	25	25	25	25
	9.5	2'-6"	A	2'-2"	A	16	16	17	18	5'-3"	C	21	21	21	21	8'-10"	D	25	25	25	25
90 MPH EXPOSURE C																					
30	3	8'-0"	A	6'-3"	A	17	21	22	23	10'-1"	B	20	21	23	24	13'-4"	C	22	23	25	26
	3.5	6'-10"	A	5'-5"	A	18	20	22	23	9'-4"	C	21	21	22	24	12'-8"	C	23	23	25	26
	4	6'-0"	A	4'-10"	A	18	20	21	22	8'-8"	C	21	21	22	23	12'-1"	C	24	24	24	26
	4.5	5'-4"	A	4'-4"	A	18	19	21	22	8'-1"	C	22	22	22	23	11'-8"	C	25	25	25	26
	5	4'-10"	A	3'-11"	A	18	19	20	22	7'-8"	C	22	22	22	23	11'-3"	C	25	25	25	25
	5.5	4'-4"	A	3'-7"	A	18	19	20	22	7'-3"	C	22	22	22	23	10'-11"	D	26	26	26	26
	6	4'-0"	A	3'-4"	A	18	19	20	21	6'-11"	C	23	23	23	23	10'-7"	D	26	26	26	26
	6.5	3'-8"	A	3'-1"	A	18	18	20	21	6'-7"	C	23	23	23	23	10'-3"	D	27	27	27	27
	7	3'-5"	A	2'-10"	A	18	18	20	21	6'-3"	C	23	23	23	23	10'-0"	D	27	27	27	27
	7.5	3'-2"	A	2'-8"	A	18	18	19	21	6'-0"	C	23	23	23	23	9'-10"	D	28	28	28	28
	8	3'-0"	A	2'-6"	A	18	18	19	21	5'-10"	C	24	24	24	24	9'-7"	D	28	28	28	28
	8.5	2'-10"	A	2'-5"	A	18	18	19	20	5'-7"	C	24	24	24	24	9'-4"	D	28	28	28	28
	9	2'-8"	A	2'-3"	A	18	18	19	20	5'-5"	C	24	24	24	24	9'-1"	D	28	28	28	28
	9.5	2'-6"	A	2'-2"	A	18	18	19	20	5'-3"	C	24	24	24	24	8'-10"	D	29	29	29	29
90 MPH EXPOSURE C																					
40	3	6'-1"	A	4'-11"	A	16	20	21	22	8'-8"	C	19	21	22	23	12'-1"	C	22	23	24	26
	3.5	5'-2"	A	4'-3"	A	16	19	21	22	8'-0"	C	20	20	22	23	11'-6"	C	22	23	24	26
	4	4'-6"	A	3'-9"	A	16	19	20	22	7'-5"	C	20	20	21	23	11'-0"	D	23	23	24	25
	4.5	4'-0"	A	3'-4"	A	16	19	20	21	6'-11"	C	21	21	21	22	10'-7"	D	24	24	24	25
	5	3'-7"	A	3'-1"	A	16	18	20	21	6'-6"	C	21	21	21	22	10'-2"	D	24	24	24	25
	5.5	3'-3"	A	2'-9"	A	16	18	19	21	6'-2"	C	21	21	21	22	9'-11"	D	25	25	25	25
	6	3'-0"	A	2'-7"	A	16	18	19	21	5'-10"	C	22	22	22	22	9'-7"	D	25	25	25	25
	6.5	2'-9"	A	2'-4"	A	16	18	19	20	5'-7"	C	22	22	22	22	9'-4"	D	26	26	26	26
	7	2'-7"	A	2'-2"	A	16	17	19	20	5'-4"	C	22	22	22	22	8'-11"	D	26	26	26	26
	7.5	2'-5"	A	2'-1"	A	16	17	19	20	5'-1"	C	22	22	22	22	8'-8"	D	26	26	26	26
	8	2'-3"	A	1'-11"	A	16	17	19	20	4'-11"	C	22	22	22	22	8'-4"	D	27	27	27	27
	8.5	2'-1"	A	1'-10"	A	16	17	19	20	4'-9"	C	23	23	23	23	8'-1"	D	27	27	27	27
	9	2'-0"	A	1'-9"	A	16	18	19	20	4'-7"	C	23	23	23	23	7'-10"	D	27	27	27	27
90 MPH EXPOSURE B																					
40	3	6'-1"	A	4'-11"	A	14	18	19	20	8'-8"	C	17	19	20	21						
	3.5	5'-2"	A	4'-3"	A	14	17	19	20	8'-0"	C	17	18	20	21						
	4	4'-6"	A	3'-9"	A	14	17	18	20	7'-5"	C	18	18	19	21						
	4.5	4'-0"	A	3'-4"	A	14	17	18	19	6'-11"	C	18	18	19	20						
	5	3'-7"	A	3'-1"	A	14	17	18	19	6'-6"	C	18	18	19	20						
	5.5	3'-3"	A	2'-9"	A	14	16	18	19	6'-2"	C	18	18	19	20						
	6	3'-0"	A	2'-7"	A	14	16	17	19	5'-10"	C	19	19	19	20						
	6.5	2'-9"	A	2'-4"	A	14	16	17	18	5'-7"	C	19	19	19	20						
	7	2'-7"	A	2'-2"	A	14	16	17	18	5'-4"	C	19	19	19	20						
	7.5	2'-5"	A	2'-1"	A	14	16	17	18	5'-1"	C	19	19	19	19						
	8	2'-3"	A	1'-11"	A	14	16	17	18	4'-11"	C	19	19	19	19						
	8.5	2'-1"	A	1'-10"	A	14	16	17	18	4'-9"	C	20	20	20	20						
	9	2'-0"	A	1'-9"	A	14	16	17	18	4'-7"	C	20	20	20	20						

4/27/2009

SOLID COVER 5.0 POST SPACINGS FOR PATIO AND COMMERCIAL COVERS 90 MPH WIND AREAS

TABLE 5.6

GROUND SNOW LOAD (PSF)	TRIB WIDTH (FT)	MAX POST SPACING ON SLAB (FT)	POST REQ'D FOR SLAB	6.5" Roll Formed Fascia (Detail E) MAX POST SPACING (FT)	Attached Structure MIN POST TYPE	Attached Structure FOOTER SIZE "d" (in)	Freestanding or Multispan Units MAX POST LENGTH 8' CONSTRAINED FOOTER "d" (in)	10' CONSTRAINED FOOTER "d" (in)	12' CONSTRAINED FOOTER "d" (in)	California Extruded Fascia (Detail G) MAX POST SPACING (FT)	Attached Structure MIN POST TYPE	Attached Structure FOOTER SIZE "d" (in)	Freestanding or Multispan Units MAX POST LENGTH 8' CONSTRAINED FOOTER "d" (in)	10' CONSTRAINED FOOTER "d" (in)	12' CONSTRAINED FOOTER "d" (in)	Classic Extruded Fascia (Detail H) MAX POST SPACING (FT)	Attached Structure MIN POST TYPE	Attached Structure FOOTER SIZE "d" (in)	Freestanding or Multispan Units MAX POST LENGTH 8' CONSTRAINED FOOTER "d" (in)	10' CONSTRAINED FOOTER "d" (in)	12' CONSTRAINED FOOTER "d" (in)
90 MPH EXPOSURE C																					
20 LIVE	3	11'-10"	A	7'-6"	A	19	21	23	24	11'-4"	A	21	22	23	24	14'-5"	B	23	24	25	27
	3.5	10'-2"	A	6'-7"	A	19	21	22	24	10'-6"	B	22	22	23	24	13'-8"	B	24	24	25	26
	4	8'-11"	A	5'-10"	A	19	20	22	23	9'-9"	B	22	22	22	24	13'-1"	C	25	25	25	26
	4.5	7'-11"	A	5'-3"	A	19	20	21	23	9'-2"	B	23	23	23	24	12'-7"	C	25	25	25	26
	5	7'-1"	A	4'-10"	A	19	20	21	22	8'-7"	B	23	23	23	23	12'-2"	C	26	26	26	26
	5.5	6'-5"	A	4'-5"	A	19	19	21	22	8'-2"	B	23	23	23	23	11'-9"	C	26	26	26	26
	6	5'-11"	A	4'-1"	A	19	19	21	22	7'-9"	B	24	24	24	24	11'-5"	C	27	27	27	27
	6.5	5'-5"	A	3'-9"	A	19	19	20	22	7'-5"	C	24	24	24	24	11'-1"	C	27	27	27	27
	7	5'-1"	A	3'-6"	A	19	19	20	21	7'-2"	C	24	24	24	24	10'-10"	C	28	28	28	28
	7.5	4'-9"	A	3'-4"	A	19	19	20	21	6'-10"	C	24	24	24	24	10'-7"	C	28	28	28	28
	8	4'-5"	A	3'-1"	A	19	19	20	21	6'-7"	C	25	25	25	25	10'-4"	C	29	29	29	29
	8.5	4'-2"	A	2'-11"	A	19	19	20	21	6'-5"	C	25	25	25	25	10'-2"	D	29	29	29	29
	9	3'-11"	A	2'-9"	A	19	19	19	21	6'-2"	C	25	25	25	25	10'-0"	D	29	29	29	29
	9.5	3'-9"	A	2'-8"	A	19	19	19	21	6'-0"	C	25	25	25	25	9'-9"	D	30	30	30	30
	10	3'-6"	A	2'-6"	A	19	19	19	21	5'-10"	C	25	25	25	25	9'-7"	D	30	30	30	30
	11	3'-2"	A	2'-4"	A	19	19	20	21	5'-6"	C	26	26	26	26	9'-2"	D	31	31	31	31
90 MPH EXPOSURE B																					
25	3	9'-7"	A	7'-2"	A	16	19	20	22	11'-1"	B	18	19	21	22	14'-2"	C	20	21	23	24
	3.5	8'-2"	A	6'-4"	A	16	19	20	21	10'-3"	B	19	19	20	22	13'-5"	C	21	21	23	24
	4	7'-2"	A	5'-8"	A	16	18	20	21	9'-6"	B	19	19	20	21	12'-10"	C	21	21	22	24
	4.5	6'-4"	A	5'-1"	A	16	18	19	20	8'-11"	C	20	20	20	21	12'-4"	C	22	22	22	23
	5	5'-9"	A	4'-7"	A	16	18	19	20	8'-5"	C	20	20	20	21	11'-11"	C	22	22	22	23
	5.5	5'-2"	A	4'-3"	A	16	17	19	20	8'-0"	C	20	20	20	21	11'-7"	C	23	23	23	23
	6	4'-9"	A	3'-11"	A	16	17	18	20	7'-7"	C	20	20	20	21	11'-3"	C	23	23	23	23
	6.5	4'-5"	A	3'-8"	A	16	17	18	19	7'-3"	C	21	21	21	21	10'-11"	D	24	24	24	24
	7	4'-1"	A	3'-5"	A	16	17	18	19	6'-11"	C	21	21	21	21	10'-8"	D	24	24	24	24
	7.5	3'-10"	A	3'-2"	A	16	17	18	19	6'-8"	C	21	21	21	21	10'-5"	D	24	24	24	24
	8	3'-7"	A	3'-0"	A	16	16	18	19	6'-5"	C	21	21	21	21	10'-2"	D	25	25	25	25
	8.5	3'-4"	A	2'-10"	A	17	17	18	19	6'-3"	C	21	21	21	21	10'-0"	D	25	25	25	25
	9	3'-2"	A	2'-8"	A	17	17	17	19	6'-0"	C	22	22	22	22	9'-10"	D	25	25	25	25
	9.5	3'-0"	A	2'-6"	A	17	17	17	19	5'-10"	C	22	22	22	22	9'-8"	D	26	26	26	26
90 MPH EXPOSURE C																					
25	3	9'-7"	A	7'-2"	A	18	21	23	24	11'-1"	B	21	22	23	24	14'-2"	C	23	24	25	27
	3.5	8'-2"	A	6'-4"	A	18	21	22	23	10'-3"	B	22	22	23	24	13'-5"	C	24	24	25	26
	4	7'-2"	A	5'-8"	A	19	20	22	23	9'-6"	B	22	22	22	24	12'-10"	C	24	24	25	26
	4.5	6'-4"	A	5'-1"	A	19	20	21	23	8'-11"	C	22	22	22	23	12'-4"	C	25	25	25	26
	5	5'-9"	A	4'-7"	A	19	20	21	22	8'-5"	C	23	23	23	23	11'-11"	C	26	26	26	26
	5.5	5'-2"	A	4'-3"	A	19	19	21	22	8'-0"	C	23	23	23	23	11'-7"	C	26	26	26	26
	6	4'-9"	A	3'-11"	A	19	19	20	22	7'-7"	C	23	23	23	23	11'-3"	C	27	27	27	27
	6.5	4'-5"	A	3'-8"	A	19	19	20	22	7'-3"	C	24	24	24	24	10'-11"	D	27	27	27	27
	7	4'-1"	A	3'-5"	A	19	19	20	21	6'-11"	C	24	24	24	24	10'-8"	D	28	28	28	28
	7.5	3'-10"	A	3'-2"	A	19	19	20	21	6'-8"	C	24	24	24	24	10'-5"	D	28	28	28	28
	8	3'-7"	A	3'-0"	A	19	19	20	21	6'-5"	C	24	24	24	24	10'-2"	D	28	28	28	28
	8.5	3'-4"	A	2'-10"	A	19	19	20	21	6'-3"	C	25	25	25	25	10'-0"	D	29	29	29	29
	9	3'-2"	A	2'-8"	A	19	19	19	21	6'-0"	C	25	25	25	25	9'-10"	D	29	29	29	29
	9.5	3'-0"	A	2'-6"	A	19	19	19	21	5'-10"	C	25	25	25	25	9'-8"	D	30	30	30	30
	10	2'-10"	A	2'-5"	A	19	19	19	21	5'-8"	C	25	25	25	25	9'-5"	D	30	30	30	30

TABLE 5.6

GROUND SNOW LOAD (PSF)	TRIB WIDTH (FT)	MAX POST SPACING ON SLAB (FT)	POST REQ'D FOR SLAB	6.5" Roll Formed Fascia (Detail E) MAX POST SPACING (FT)	Attached Structure MIN POST TYPE	Attached Structure FOOTER SIZE "d" (in)	Freestanding or Multispan Units MAX POST LENGTH 8' CONSTRAINED FOOTER "d" (in)	10' CONSTRAINED FOOTER "d" (in)	12' CONSTRAINED FOOTER "d" (in)	California Extruded Fascia (Detail G) MAX POST SPACING (FT)	Attached Structure MIN POST TYPE	Attached Structure FOOTER SIZE "d" (in)	Freestanding or Multispan Units MAX POST LENGTH 8' CONSTRAINED FOOTER "d" (in)	10' CONSTRAINED FOOTER "d" (in)	12' CONSTRAINED FOOTER "d" (in)	Classic Extruded Fascia (Detail H) MAX POST SPACING (FT)	Attached Structure MIN POST TYPE	Attached Structure FOOTER SIZE "d" (in)	Freestanding or Multispan Units MAX POST LENGTH 8' CONSTRAINED FOOTER "d" (in)	10' CONSTRAINED FOOTER "d" (in)	12' CONSTRAINED FOOTER "d" (in)
90 MPH EXPOSURE B																					
60	3	4'-1"	A	3'-5"	A	12	17	18	19	7'-0"	C	16	18	19	20	10'-7"	D	18	20	21	23
	3.5	3'-6"	A	2'-11"	A	12	16	18	19	6'-4"	C	16	18	19	20	10'-0"	D	19	20	21	22
	4	3'-0"	A	2'-7"	A	12	16	17	19	5'-11"	C	16	17	19	20	9'-7"	D	19	20	21	22
	4.5	2'-8"	A	2'-4"	A	13	16	17	18	5'-6"	C	17	17	18	20	9'-2"	D	20	20	21	22
	5	2'-5"	A	2'-1"	A	13	16	17	18	5'-2"	C	17	17	18	19	8'-8"	D	20	20	21	22
	5.5	2'-2"	A	1'-11"	A	13	15	17	18	4'-10"	C	17	17	18	19	8'-3"	D	20	20	21	22
	6	2'-0"	A	1'-9"	A	13	15	17	18	4'-7"	C	17	17	18	19	7'-11"	D	21	21	21	22
	6.5	1'-10"	A	1'-7"	A	13	15	17	18	4'-5"	C	17	17	18	19	7'-7"	D	21	21	21	21
	7	1'-9"	A	1'-6"	A	13	15	17	18	4'-2"	D	18	18	18	19	7'-3"	D	21	21	21	21
	7.5	1'-7"	A	1'-5"	A	13	15	17	18	4'-0"	D	18	18	18	19	7'-0"	D	21	21	21	21
	8	1'-6"	A	1'-4"	A	13	16	17	18	3'-10"	D	18	18	18	19	6'-9"	D	22	22	22	22
	8.5	1'-5"	A	1'-3"	A	13	16	17	18	3'-8"	D	18	18	18	19	6'-6"	D	22	22	22	22
90 MPH EXPOSURE C																					
60	3	4'-1"	A	3'-5"	A	14	19	20	21	7'-0"	C	18	20	21	22	10'-7"	D	21	22	24	25
	3.5	3'-6"	A	2'-11"	A	14	18	20	21	6'-4"	C	18	19	21	22	10'-0"	D	22	22	24	25
	4	3'-0"	A	2'-7"	A	14	18	19	21	5'-11"	C	19	19	21	22	9'-7"	D	22	22	23	25
	4.5	2'-8"	A	2'-4"	A	14	18	19	20	5'-6"	C	19	19	20	22	9'-2"	D	23	23	23	24
	5	2'-5"	A	2'-1"	A	14	17	19	20	5'-2"	C	19	19	20	22	8'-8"	D	23	23	23	24
	5.5	2'-2"	A	1'-11"	A	14	17	19	20	4'-10"	C	20	20	20	21	8'-3"	D	23	23	23	24
	6	2'-0"	A	1'-9"	A	14	17	18	20	4'-7"	C	20	20	20	21	7'-11"	D	24	24	24	24
	6.5	1'-10"	A	1'-7"	A	14	17	18	20	4'-5"	C	20	20	20	21	7'-7"	D	24	24	24	24
	7	1'-9"	A	1'-6"	A	14	17	18	20	4'-2"	D	20	20	20	21	7'-3"	D	24	24	24	24

TABLE 5.2 TRIBUTARY WIDTHS FOR SINGLE SPAN ATTACHED STRUCTURES

OVER-HANG (FT)	PROJECTION OF SINGLE SPAN STUCTURES (FT) 8'	9'	10'	11'	12'	13'	14'	15'	16'	17'	18'	19'	20'	21'	22'
0'	4'	4.5'	5'	5.5'	6'	6.5'	7'	7.5'	8'	8.5'	9'	9.5'	10'	10.5'	11'
1'	4.5'	5'	5.5'	6'	6.5'	7'	7.5'	8'	8.5'	9'	9.5'	10'	10.5'	11'	11.5'
2'	5'	5.5'	6'	6.5'	7'	7.5'	8'	8.5'	9'	9.5'	10'	10.5'	11'	11.5'	12'
3'	5.5'	6'	6.5'	7'	7.5'	8'	8.5'	9'	9.5'	10'	10.5'	11'	11.5'	12'	12.5'
4'	6'	6.5'	7'	7.5'	8'	8.5'	9'	9.5'	10'	10.5'	11'	11.5'	12'	12.5'	13'
5'	6.5'	7'	7.5'	8'	8.5'	9'	9.5'	10'	10.5'	11'	11.5'	12'	12.5'	13'	13.5'

TABLE 5.3 Post Requirements for Attached Structures

Post Description	Max Hgt	POST
Twin 0.062"x1.5"x1.5" ScrolL	9'	A
0.042"x3"x8" Aluminum Post	11'	B
0.024"Post with Sideplates	12'	B
Clover 0.032"x3"x3" Alum	12'	B
Clover 0.040"x3"x3" Alum	12'	B
Colonial 0.062" Extruded	12'	C
0.041"x3"x3" Steel Clover	12'	D
0.041"x3"x3" Steel Clover	8'	E
3/16"x3"x3" Steel Square	15'	F
3/16"x4"x4" Steel Square	18'	G
5/16"x4"x4" Steel Square	18'	H

TABLE 5.4 Post Requirements for Freestanding Structures

Post Description	Maximum Footing	Max Height	POST
0.041"x3"x3" Steel Clover	d = 23"	12'	D
0.041"x3"x3" Steel Clover	d = 23"	8'	E
3/16"x3"x3" Steel Square	d = 32"	15'	F
3/16"x4"x4" Steel Square	d = 38"	18'	G
5/16"x4"x4" Steel Square	d = 42"	18'	H

GENERAL INSTRUCTIONS FOR THESE TABLES

1. CHOOSE FREESTANDING OR ATTACHED STRUCTURE
2. CHOOSE PROJECTION, WIDTH AND OVERHANG OF UNIT
3. DETERMINE WIND AND LIVE OR SNOW LOAD OF STRUCTURE SITE (PATIO UNITS USE 10 PSF MIN, COMMERCIAL UNITS USE 20PSF MIN)
4. CHOOSE A PANEL FROM **TABLES 4.1** TO **4.8** THAT HAS ADEQUATE CLEARSPAN FOR YOUR NEEDS.
5. DETERMINE TRIBUTARY WIDTH FROM TABLE 5.2 OR CALCULATE FROM TRIBUTARY DIAGRAM ON**SC02 PAGE 2 OF 2**
6. CHOOSE A HEADER FROM TABLE 5.6 THAT HAS ADEQUATE POST SPACING.
7. USE THE APPROPRIATE FOOTER SIZE SHOWN.
8. FOR SINGLE SPAN ATTACHED UNIT USE THE POST SHOWN UPGRADE THE POST IF THE HEIGHT IS NOT SUFFICIENT FREESTANDING AND MULTISPAN UNITS USE TABLE 5.4
9. FIND THE O/C SPACING OR # OF FASTENERS FOR ATTACHING TO WALL FROM TABLE 7.5
10. USE THE APPROPRIATE DETAILS

FOR PATIO SLABS FOLLOW 1-6 FROM ABOVE THEN

SLAB 7. DETERMINE MAXIMUM POST SPACING ON SLAB FROM TABLE 5.6
SLAB 8. USE THE SMALLER OF THE POST SPACING ON SLAB OR HEADER POST SPACING
SLAB 9. FOLLOW **9-11** FROM ABOVE
SLAB 10. FOR **TWO** POST STRUCTURES USE **TABLE 7.1** ON SHEET **M3** FOR SLAB REQUIREMENTS INSTEAD OF THESE TABLES
SLAB11. CHECK TABLES **SLAB1** AND **SLAB2** ON **M5** FOR CORNER DISTANCE REQUIRMENTS.

Amerimax Building Products
5208 Tennyson Parkway
Plano, Texas 75024

Carl Putnam, P. E.
3441 Ivylink Place
Lynchburg, VA 24503
carlputnam@comcast.net

REGISTERED PROFESSIONAL ENGINEER
CARL PUTNAM
C 68139
EXP. 6/30/2009
CIVIL
STATE OF CALIFORNIA

4/27/2009

SOLID COVER 5.0 POST SPACINGS FOR PATIO AND COMMERCIAL COVERS 90 MPH WIND AREAS

TABLE 5.7

GROUND SNOW LOAD (PSF)	TRIB WIDTH (FT)	MAX POST SPACING ON SLAB (FT)	POST REQ'D FOR SLAB	5.5" Extruded Fascia (Detail L) MAX POST SPACING (FT)	Attached Structure MIN POST TYPE	Attached Structure FOOTER SIZE "d" (in)	Freestanding or Multispan Units MAX POST LENGTH CONSTRAINED FOOTER 8' "d" (in)	10' "d" (in)	12' "d" (in)	Alaskan Fascia (Detail K) MAX POST SPACING (FT)	Attached Structure MIN POST TYPE	Attached Structure FOOTER SIZE "d" (in)	Freestanding or Multispan Units MAX POST LENGTH CONSTRAINED FOOTER 8' "d" (in)	10' "d" (in)	12' "d" (in)	0.041"x3"x3" Cloverleaf (Detail W) MAX POST SPACING (FT)	Attached Structure MIN POST TYPE	Attached Structure FOOTER SIZE "d" (in)	Freestanding or Multispan Units MAX POST LENGTH CONSTRAINED FOOTER 8' "d" (in)	10' "d" (in)	12' "d" (in)
90 MPH EXPOSURE B																					
10 LIVE	3	22'-8"	A	12'-10"	A	19	21	22	23	15'-9"	A	21	22	23	24	12'-10"	A	19	20	22	23
	3.5	19'-5"	A	12'-2"	A	20	21	22	23	15'-0"	A	21	21	23	24	12'-2"	A	20	20	21	23
	4	17'-0"	A	11'-8"	A	21	21	22	23	14'-4"	A	22	22	23	24	11'-8"	A	21	21	21	22
	4.5	15'-1"	A	11'-2"	A	21	21	22	23	13'-9"	A	23	23	23	24	11'-2"	A	21	21	21	22
	5	13'-7"	A	10'-10"	A	22	22	22	23	13'-3"	A	23	23	23	23	10'-10"	A	22	22	22	22
	5.5	12'-4"	A	10'-6"	A	22	22	22	22	12'-10"	B	24	24	24	24	10'-6"	A	22	22	22	22
	6	11'-4"	A	10'-4"	A	23	23	23	23	12'-6"	B	24	24	24	24	10'-1"	A	22	22	22	22
	6.5	10'-5"	A	10'-2"	A	23	23	23	23	12'-2"	B	24	24	24	24	9'-7"	A	23	23	23	23
	7	9'-8"	A	9'-11"	B	23	23	23	23	11'-10"	B	25	25	25	25	9'-2"	A	23	23	23	23
	7.5	9'-1"	A	9'-9"	B	24	24	24	24	11'-7"	B	25	25	25	25	8'-9"	A	23	23	23	23
	8	8'-6"	A	9'-8"	B	24	24	24	24	11'-4"	B	26	26	26	26	8'-5"	A	23	23	23	23
	8.5	8'-0"	A	9'-6"	B	25	25	25	25	11'-1"	C	26	26	26	26	8'-1"	B	23	23	23	23
	9	7'-6"	A	9'-4"	B	25	25	25	25	10'-11"	C	26	26	26	26	7'-10"	B	24	24	24	24
	9.5	7'-2"	A	9'-2"	B	25	25	25	25	10'-9"	C	27	27	27	27	7'-7"	B	24	24	24	24
	10	6'-9"	A	9'-0"	B	26	26	26	26	10'-6"	C	27	27	27	27	7'-4"	B	24	24	24	24
	11	6'-2"	A	8'-9"	C	26	26	26	26	10'-2"	C	28	28	28	28	6'-10"	B	24	24	24	24
	12	5'-8"	A	8'-6"	C	27	27	27	27	9'-11"	C	28	28	28	28	6'-6"	B	24	24	24	24
	13	5'-2"	A	8'-3"	C	27	27	27	27	9'-8"	C	29	29	29	29	6'-2"	B	25	25	25	25
90 MPH EXPOSURE C																					
10 LIVE	3	22'-8"	A	11'-10"	A	22	23	24	25	14'-6"	A	23	24	25	27	12'-0"	A	22	22	24	25
	3.5	19'-5"	A	11'-3"	A	22	22	24	25	13'-10"	A	24	24	25	26	11'-5"	A	22	22	23	25
	4	17'-0"	A	10'-9"	A	23	23	24	25	13'-2"	A	25	25	25	26	10'-11"	A	23	23	23	25
	4.5	15'-1"	A	10'-6"	A	24	24	24	25	12'-8"	A	25	25	25	26	10'-6"	A	24	24	24	24
	5	13'-7"	A	10'-3"	A	24	24	24	25	12'-3"	A	26	26	26	26	10'-1"	A	24	24	24	24
	5.5	12'-4"	A	9'-11"	A	25	25	25	25	11'-10"	A	26	26	26	26	9'-9"	A	25	25	25	25
	6	11'-4"	A	9'-8"	A	25	25	25	25	11'-6"	B	27	27	27	27	9'-6"	A	25	25	25	25
	6.5	10'-5"	A	9'-7"	A	26	26	26	26	11'-3"	B	27	27	27	27	9'-3"	A	26	26	26	26
	7	9'-8"	A	9'-4"	A	26	26	26	26	10'-11"	B	28	28	28	28	9'-0"	A	26	26	26	26
	7.5	9'-1"	A	9'-2"	B	27	27	27	27	10'-8"	B	28	28	28	28	8'-9"	A	27	27	27	27
	8	8'-6"	A	8'-11"	B	27	27	27	27	10'-6"	B	29	29	29	29	8'-5"	A	27	27	27	27
	8.5	8'-0"	A	8'-9"	B	28	28	28	28	10'-3"	B	29	29	29	29	8'-1"	B	27	27	27	27
	9	7'-6"	A	8'-7"	B	28	28	28	28	10'-1"	B	29	29	29	29	7'-10"	B	27	27	27	27
	9.5	7'-2"	A	8'-5"	B	28	28	28	28	9'-11"	C	30	30	30	30	7'-7"	B	27	27	27	27
	10	6'-9"	A	8'-4"	B	29	29	29	29	9'-9"	C	30	30	30	30	7'-4"	B	27	27	27	27
	11	6'-2"	A	8'-1"	B	29	29	29	29	9'-5"	C	31	31	31	31	6'-10"	B	28	28	28	28
	12	5'-8"	A	7'-10"	C	30	30	30	30	9'-2"	C	31	31	31	31	6'-6"	B	28	28	28	28
	13	5'-2"	A	7'-7"	C	30	30	30	30	8'-11"	C	32	32	32	32	6'-2"	B	28	28	28	28
90 MPH EXPOSURE B																					
20 LIVE	3	11'-10"	A	11'-11"	B	19	20	22	23	12'-6"	B	19	21	22	23	10'-2"	A	18	19	21	22
	3.5	10'-2"	A	11'-4"	B	19	20	22	23	11'-10"	B	20	20	22	23	9'-6"	A	18	19	20	22
	4	8'-11"	A	10'-10"	B	20	20	21	23	11'-4"	B	20	20	22	23	8'-9"	A	19	19	20	21
	4.5	7'-11"	A	10'-5"	B	21	21	21	22	10'-11"	C	21	21	21	23	8'-1"	B	19	19	20	21
	5	7'-1"	A	9'-11"	C	21	21	21	22	10'-6"	C	21	21	21	22	7'-7"	B	19	19	20	21
	5.5	6'-5"	A	9'-5"	C	21	21	21	22	10'-2"	C	22	22	22	22	7'-1"	B	19	19	19	21
	6	5'-11"	A	9'-0"	C	22	22	22	22	9'-11"	C	22	22	22	22	6'-9"	B	20	20	20	20
	6.5	5'-5"	A	8'-7"	C	22	22	22	22	9'-8"	C	23	23	23	23	6'-5"	B	20	20	20	20
	7	5'-1"	A	8'-3"	C	22	22	22	22	9'-5"	C	23	23	23	23	6'-1"	B	20	20	20	20
	7.5	4'-9"	A	7'-11"	C	22	22	22	22	9'-2"	C	23	23	23	23	5'-10"	B	20	20	20	20
	8	4'-5"	A	7'-7"	C	22	22	22	22	9'-0"	C	24	24	24	24	5'-7"	B	20	20	20	20
	8.5	4'-2"	A	7'-4"	C	23	23	23	23	8'-9"	C	24	24	24	24	5'-4"	B	20	20	20	20
	9	3'-11"	A	7'-1"	C	23	23	23	23	8'-5"	C	24	24	24	24	5'-1"	B	20	20	20	20
	9.5	3'-9"	A	6'-10"	C	23	23	23	23	8'-2"	C	24	24	24	24	4'-11"	B	21	21	21	21
	10	3'-6"	A	6'-8"	C	23	23	23	23	8'-0"	C	25	25	25	25	4'-9"	B	21	21	21	21
	11	3'-2"	A	6'-3"	C	23	23	23	23	7'-7"	C	25	25	25	25	4'-5"	C	21	21	21	21
	12	2'-11"	A	5'-11"	C	24	24	24	24	7'-2"	D	25	25	25	25	4'-2"	C	21	21	21	21
	13	2'-8"	A	5'-8"	C	24	24	24	24	6'-10"	D	26	26	26	26	3'-11"	C	21	21	21	21

TABLE 5.7

GROUND SNOW LOAD (PSF)	TRIB WIDTH (FT)	MAX POST SPACING ON SLAB (FT)	POST REQ'D FOR SLAB	5.5" Extruded Fascia (Detail L) MAX POST SPACING (FT)	Attached Structure MIN POST TYPE	Attached Structure FOOTER SIZE "d" (in)	Freestanding or Multispan Units MAX POST LENGTH CONSTRAINED FOOTER 8' "d" (in)	10' "d" (in)	12' "d" (in)	Alaskan Fascia (Detail K) MAX POST SPACING (FT)	Attached Structure MIN POST TYPE	Attached Structure FOOTER SIZE "d" (in)	Freestanding or Multispan Units MAX POST LENGTH CONSTRAINED FOOTER 8' "d" (in)	10' "d" (in)	12' "d" (in)	0.041"x3"x3" Cloverleaf (Detail W) MAX POST SPACING (FT)	Attached Structure MIN POST TYPE	Attached Structure FOOTER SIZE "d" (in)	Freestanding or Multispan Units MAX POST LENGTH CONSTRAINED FOOTER 8' "d" (in)	10' "d" (in)	12' "d" (in)
90 MPH EXPOSURE B																					
30	3	8'-0"	A	11'-1"	C	18	20	21	23	11'-7"	C	19	20	22	23	9'-1"	B	17	19	20	21
	3.5	6'-10"	A	10'-6"	C	19	20	21	22	11'-0"	C	19	20	21	23	8'-3"	B	18	19	20	21
	4	6'-0"	A	10'-0"	C	20	20	21	22	10'-6"	C	20	20	21	22	7'-7"	B	18	18	20	21
	4.5	5'-4"	A	9'-4"	C	20	20	21	22	10'-1"	C	20	20	21	22	7'-0"	B	18	18	19	21
	5	4'-10"	A	8'-9"	C	20	20	21	22	9'-9"	C	21	21	21	22	6'-7"	C	18	18	19	20
	5.5	4'-4"	A	8'-4"	C	20	20	20	22	9'-5"	C	21	21	21	22	6'-2"	C	18	18	19	20
	6	4'-0"	A	7'-11"	C	21	21	21	21	9'-2"	C	22	22	22	22	5'-10"	C	19	19	19	20
	6.5	3'-8"	A	7'-6"	C	21	21	21	21	8'-11"	D	22	22	22	22	5'-6"	C	19	19	19	20
	7	3'-5"	A	7'-3"	C	21	21	21	21	8'-7"	D	22	22	22	22	5'-3"	C	19	19	19	20
	7.5	3'-2"	A	6'-11"	C	21	21	21	21	8'-3"	D	23	23	23	23	5'-0"	C	19	19	19	20
	8	3'-0"	A	6'-8"	C	21	21	21	21	8'-0"	D	23	23	23	23	4'-9"	C	19	19	19	19
	8.5	2'-10"	A	6'-5"	C	22	22	22	22	7'-9"	D	23	23	23	23	4'-7"	C	19	19	19	19
	9	2'-8"	A	6'-2"	C	22	22	22	22	7'-6"	D	23	23	23	23	4'-5"	C	19	19	19	19
	9.5	2'-6"	A	6'-0"	C	22	22	22	22	7'-3"	D	23	23	23	23	4'-3"	C	20	20	20	20
90 MPH EXPOSURE C																					
30	3	8'-0"	A	11'-1"	C	21	22	24	25	11'-7"	C	21	23	24	25	9'-1"	B	20	21	22	24
	3.5	6'-10"	A	10'-6"	C	22	22	24	25	11'-0"	C	22	22	24	25	8'-3"	B	20	21	22	23
	4	6'-0"	A	10'-0"	C	22	22	23	25	10'-6"	C	23	23	24	25	7'-7"	B	20	20	22	23
	4.5	5'-4"	A	9'-4"	C	23	23	23	24	10'-1"	C	23	23	23	25	7'-0"	B	21	21	21	23
	5	4'-10"	A	8'-9"	C	23	23	23	24	9'-9"	C	24	24	24	25	6'-7"	C	21	21	21	23
	5.5	4'-4"	A	8'-4"	C	23	23	23	24	9'-5"	C	24	24	24	24	6'-2"	C	21	21	21	22
	6	4'-0"	A	7'-11"	C	24	24	24	24	9'-2"	C	25	25	25	25	5'-10"	C	21	21	21	22
	6.5	3'-8"	A	7'-6"	C	24	24	24	24	8'-11"	D	25	25	25	25	5'-6"	C	22	22	22	22
	7	3'-5"	A	7'-3"	C	24	24	24	24	8'-7"	D	26	26	26	26	5'-3"	C	22	22	22	22
	7.5	3'-2"	A	6'-11"	C	25	25	25	25	8'-3"	D	26	26	26	26	5'-0"	C	22	22	22	22
	8	3'-0"	A	6'-8"	C	25	25	25	25	8'-0"	D	26	26	26	26	4'-9"	C	22	22	22	22
	8.5	2'-10"	A	6'-5"	C	25	25	25	25	7'-9"	D	26	26	26	26	4'-7"	C	22	22	22	22
	9	2'-8"	A	6'-2"	C	25	25	25	25	7'-6"	D	27	27	27	27	4'-5"	C	22	22	22	22
	9.5	2'-6"	A	6'-0"	C	25	25	25	25	7'-3"	D	27	27	27	27	4'-3"	C	22	22	22	22
90 MPH EXPOSURE C																					
40	3	6'-1"	A	10'-0"	C	20	22	23	25	10'-6"	C	21	22	24	25	7'-8"	B	19	20	22	23
	3.5	5'-2"	A	9'-2"	C	21	22	23	24	10'-0"	C	21	22	23	25	6'-11"	B	19	20	21	23
	4	4'-6"	A	8'-6"	C	21	21	23	24	9'-6"	C	22	22	23	24	6'-4"	C	19	20	21	22
	4.5	4'-0"	A	8'-0"	C	22	22	22	24	9'-2"	C	23	23	23	24	5'-10"	C	20	20	21	22
	5	3'-7"	A	7'-6"	C	22	22	22	23	8'-10"	D	23	23	23	24	5'-5"	C	20	20	21	22
	5.5	3'-3"	A	7'-1"	C	22	22	22	23	8'-5"	D	24	24	24	24	5'-1"	C	20	20	20	22
	6	3'-0"	A	6'-8"	C	23	23	23	23	8'-0"	D	24	24	24	24	4'-10"	C	20	20	20	22
	6.5	2'-9"	A	6'-5"	C	23	23	23	23	7'-8"	D	24	24	24	24	4'-6"	C	20	20	20	21
	7	2'-7"	A	6'-1"	C	23	23	23	23	7'-4"	D	24	24	24	24	4'-4"	C	20	20	20	21
	7.5	2'-5"	A	5'-10"	D	23	23	23	23	7'-1"	D	25	25	25	25	4'-1"	C	21	21	21	21
	8	2'-3"	A	5'-7"	D	23	23	23	23	6'-10"	D	25	25	25	25	3'-11"	C	21	21	21	21
	8.5	2'-1"	A	5'-5"	D	24	24	24	24	6'-7"	D	25	25	25	25	3'-9"	C	21	21	21	21
	9	2'-0"	A	5'-2"	D	24	24	24	24	6'-4"	D	25	25	25	25	3'-7"	C	21	21	21	21
90 MPH EXPOSURE B																					
40	3	6'-1"	A	10'-0"	C	18	20	21	22	10'-6"	C	18	20	21	22						
	3.5	5'-2"	A	9'-2"	C	18	19	21	22	10'-0"	C	19	20	21	22						
	4	4'-6"	A	8'-6"	C	19	19	20	22	9'-6"	C	19	20	21	22						
	4.5	4'-0"	A	8'-0"	C	19	19	20	21	9'-2"	C	20	20	21	22						
	5	3'-7"	A	7'-6"	C	19	19	20	21	8'-10"	D	20	20	21	22						
	5.5	3'-3"	A	7'-1"	C	19	19	20	21	8'-5"	D	21	21	21	22						
	6	3'-0"	A	6'-8"	C	20	20	20	21	8'-0"	D	21	21	21	21						
	6.5	2'-9"	A	6'-5"	C	20	20	20	21	7'-8"	D	21	21	21	21						
	7	2'-7"	A	6'-1"	C	20	20	20	20	7'-4"	D	21	21	21	21						
	7.5	2'-5"	A	5'-10"	D	20	20	20	20	7'-1"	D	21	21	21	21						
	8	2'-3"	A	5'-7"	D	20	20	20	20	6'-10"	D	22	22	22	22						
	8.5	2'-1"	A	5'-5"	D	20	20	20	20	6'-7"	D	22	22	22	22						
	9	2'-0"	A	5'-2"	D	21	21	21	21	6'-4"	D	22	22	22	22						

4/27/2009

SOLID COVER 5.0 POST SPACINGS FOR PATIO AND COMMERCIAL COVERS 90 MPH WIND AREAS

TABLE 5.7

GROUND SNOW LOAD (PSF)	TRIB WIDTH (FT)	MAX POST SPACING ON SLAB (FT)	POST REQ'D FOR SLAB	5.5" Extruded Fascia (Detail L) MAX POST SPACING (FT)	MIN POST TYPE	Attached Structure FOOTER SIZE "d" (in)	Freestanding or Multispan Units MAX POST LENGTH CONSTRAINED FOOTER 8' "d" (in)	10' "d" (in)	12' "d" (in)	Alaskan Fascia (Detail K) MAX POST SPACING (FT)	MIN POST TYPE	Attached Structure FOOTER SIZE "d" (in)	Freestanding or Multispan Units MAX POST LENGTH CONSTRAINED FOOTER 8' "d" (in)	10' "d" (in)	12' "d" (in)	0.041"x3"x3" Cloverleaf (Detail W) MAX POST SPACING (FT)	MIN POST TYPE	Attached Structure FOOTER SIZE "d" (in)	Freestanding or Multispan Units MAX POST LENGTH CONSTRAINED FOOTER 8' "d" (in)	10' "d" (in)	12' "d" (in)
90 MPH EXPOSURE C																					
20 LIVE	3	11'-10"	A	11'-10"	A	22	23	24	25	12'-6"	B	22	23	24	26	10'-2"	A	21	21	23	24
	3.5	10'-2"	A	11'-3"	B	22	22	24	25	11'-10"	B	23	23	24	25	9'-6"	A	21	21	23	24
	4	8'-11"	A	10'-9"	B	23	23	24	25	11'-4"	B	23	23	24	25	8'-9"	A	21	21	22	24
	4.5	7'-11"	A	10'-5"	B	24	24	24	25	10'-11"	C	24	24	24	25	8'-1"	B	22	22	22	23
	5	7'-1"	A	9'-11"	C	24	24	24	25	10'-6"	C	25	25	25	25	7'-7"	B	22	22	22	23
	5.5	6'-5"	A	9'-5"	C	24	24	24	24	10'-2"	C	25	25	25	25	7'-1"	B	22	22	22	23
	6	5'-11"	A	9'-0"	C	25	25	25	25	9'-11"	C	26	26	26	26	6'-9"	B	23	23	23	23
	6.5	5'-5"	A	8'-7"	C	25	25	25	25	9'-8"	C	26	26	26	26	6'-5"	B	23	23	23	23
	7	5'-1"	A	8'-3"	C	25	25	25	25	9'-5"	C	27	27	27	27	6'-1"	B	23	23	23	23
	7.5	4'-9"	A	7'-11"	C	26	26	26	26	9'-2"	C	27	27	27	27	5'-10"	B	23	23	23	23
	8	4'-5"	A	7'-7"	C	26	26	26	26	9'-0"	C	27	27	27	27	5'-7"	B	23	23	23	23
	8.5	4'-2"	A	7'-4"	C	26	26	26	26	8'-9"	C	28	28	28	28	5'-4"	B	23	23	23	23
	9	3'-11"	A	7'-1"	C	26	26	26	26	8'-5"	C	28	28	28	28	5'-1"	B	24	24	24	24
	9.5	3'-9"	A	6'-10"	C	26	26	26	26	8'-2"	C	28	28	28	28	4'-11"	B	24	24	24	24
	10	3'-6"	A	6'-8"	C	27	27	27	27	8'-0"	C	28	28	28	28	4'-9"	B	24	24	24	24
	11	3'-2"	A	6'-3"	C	27	27	27	27	7'-7"	C	29	29	29	29	4'-5"	C	24	24	24	24
90 MPH EXPOSURE B																					
25	3	9'-7"	A	11'-9"	B	19	20	22	23	12'-4"	B	19	21	22	23	10'-0"	B	18	19	21	22
	3.5	8'-2"	A	11'-2"	C	19	20	22	23	11'-8"	C	20	20	22	23	9'-3"	B	18	19	20	22
	4	7'-2"	A	10'-8"	C	20	20	21	23	11'-2"	C	20	20	22	23	8'-6"	B	18	19	20	21
	4.5	6'-4"	A	10'-3"	C	20	20	21	22	10'-9"	C	21	21	21	23	7'-10"	B	19	19	20	21
	5	5'-9"	A	9'-8"	C	21	21	21	22	10'-4"	C	21	21	21	22	7'-4"	B	19	19	20	21
	5.5	5'-2"	A	9'-2"	C	21	21	21	22	10'-0"	C	22	22	22	22	6'-11"	B	19	19	19	21
	6	4'-9"	A	8'-9"	C	21	21	21	22	9'-9"	C	22	22	22	22	6'-6"	C	19	19	19	20
	6.5	4'-5"	A	8'-4"	C	22	22	22	22	9'-6"	C	23	23	23	23	6'-2"	C	20	20	20	20
	7	4'-1"	A	8'-0"	C	22	22	22	22	9'-3"	C	23	23	23	23	5'-11"	C	20	20	20	20
	7.5	3'-10"	A	7'-8"	C	22	22	22	22	9'-1"	C	23	23	23	23	5'-7"	C	20	20	20	20
	8	3'-7"	A	7'-5"	C	22	22	22	22	8'-9"	D	24	24	24	24	5'-4"	C	20	20	20	20
	8.5	3'-4"	A	7'-2"	C	22	22	22	22	8'-6"	D	24	24	24	24	5'-2"	C	20	20	20	20
	9	3'-2"	A	6'-11"	C	23	23	23	23	8'-3"	D	24	24	24	24	4'-11"	C	20	20	20	20
	9.5	3'-0"	A	6'-8"	C	23	23	23	23	8'-0"	D	24	24	24	24	4'-9"	C	20	20	20	20
90 MPH EXPOSURE C																					
25	3	9'-7"	A	11'-9"	B	22	23	24	25	12'-4"	B	22	23	24	26	10'-0"	B	20	21	23	24
	3.5	8'-2"	A	11'-2"	C	22	22	24	25	11'-8"	C	23	23	24	25	9'-3"	B	21	21	23	24
	4	7'-2"	A	10'-8"	C	23	23	24	25	11'-2"	C	23	23	24	25	8'-6"	B	21	21	22	24
	4.5	6'-4"	A	10'-3"	C	24	24	24	25	10'-9"	C	24	24	24	25	7'-10"	B	22	22	22	23
	5	5'-9"	A	9'-8"	C	24	24	24	25	10'-4"	C	24	24	24	25	7'-4"	B	22	22	22	23
	5.5	5'-2"	A	9'-2"	C	24	24	24	24	10'-0"	C	25	25	25	25	6'-11"	B	22	22	22	23
	6	4'-9"	A	8'-9"	C	25	25	25	25	9'-9"	C	25	25	25	25	6'-6"	C	22	22	22	23
	6.5	4'-5"	A	8'-4"	C	25	25	25	25	9'-6"	C	26	26	26	26	6'-2"	C	23	23	23	23
	7	4'-1"	A	8'-0"	C	25	25	25	25	9'-3"	C	26	26	26	26	5'-11"	C	23	23	23	23
	7.5	3'-10"	A	7'-8"	C	25	25	25	25	9'-1"	C	27	27	27	27	5'-7"	C	23	23	23	23
	8	3'-7"	A	7'-5"	C	26	26	26	26	8'-9"	D	27	27	27	27	5'-4"	C	23	23	23	23
	8.5	3'-4"	A	7'-2"	C	26	26	26	26	8'-6"	D	27	27	27	27	5'-2"	C	23	23	23	23
	9	3'-2"	A	6'-11"	C	26	26	26	26	8'-3"	D	28	28	28	28	4'-11"	C	23	23	23	23
	9.5	3'-0"	A	6'-8"	C	26	26	26	26	8'-0"	D	28	28	28	28	4'-9"	C	23	23	23	23
	10	2'-10"	A	6'-6"	C	26	26	26	26	7'-9"	D	28	28	28	28	4'-7"	C	24	24	24	24

TABLE 5.7

GROUND SNOW LOAD (PSF)	TRIB WIDTH (FT)	MAX POST SPACING ON SLAB (FT)	POST REQ'D FOR SLAB	5.5" Extruded Fascia (Detail L) MAX POST SPACING (FT)	MIN POST TYPE	Attached Structure FOOTER SIZE "d" (in)	Freestanding or Multispan Units MAX POST LENGTH CONSTRAINED FOOTER 8' "d" (in)	10' "d" (in)	12' "d" (in)	Alaskan Fascia (Detail K) MAX POST SPACING (FT)	MIN POST TYPE	Attached Structure FOOTER SIZE "d" (in)	Freestanding or Multispan Units MAX POST LENGTH CONSTRAINED FOOTER 8' "d" (in)	10' "d" (in)	12' "d" (in)	0.041"x3"x3" Cloverleaf (Detail W) MAX POST SPACING (FT)	MIN POST TYPE	Attached Structure FOOTER SIZE "d" (in)	Freestanding or Multispan Units MAX POST LENGTH CONSTRAINED FOOTER 8' "d" (in)	10' "d" (in)	12' "d" (in)
90 MPH EXPOSURE B																					
60	3	4'-1"	A	8'-0"	C	16	19	20	21	9'-2"	C	17	19	21	22	5'-11"	C	15	18	19	20
	3.5	3'-6"	A	7'-4"	C	17	19	20	21	8'-8"	D	18	19	21	22	5'-4"	C	15	17	19	20
	4	3'-0"	A	6'-9"	C	17	18	20	21	8'-1"	D	18	19	20	21	4'-10"	C	15	17	18	19
	4.5	2'-8"	A	6'-3"	C	17	18	19	21	7'-7"	D	19	19	20	21	4'-5"	C	16	17	18	19
	5	2'-5"	A	5'-11"	D	18	18	19	20	7'-1"	D	19	19	20	21	4'-1"	C	16	17	18	19
	5.5	2'-2"	A	5'-7"	D	18	18	19	20	6'-9"	D	19	19	20	21	3'-10"	C	16	16	18	19
	6	2'-0"	A	5'-3"	D	18	18	19	20	6'-5"	D	19	19	19	21	3'-7"	C	16	16	18	19
	6.5	1'-10"	A	5'-0"	D	18	18	19	20	6'-1"	D	19	19	19	20	3'-5"	C	16	16	17	19
	7	1'-9"	A	4'-9"	D	18	18	18	20	5'-10"	D	20	20	20	20	3'-2"	C	16	16	17	18
	7.5	1'-7"	A	4'-6"	D	19	19	19	20	5'-7"	D	20	20	20	20	2'-11"	C	16	16	17	18
	8	1'-6"	A	4'-4"	D	19	19	19	19	5'-5"	D	20	20	20	20	2'-9"	C	16	16	17	18
	8.5	1'-5"	A	4'-2"	D	19	19	19	19	5'-2"	D	20	20	20	20	2'-7"	C	16	16	17	18
90 MPH EXPOSURE C																					
60	3	4'-1"	A	8'-0"	C	19	21	22	24	9'-2"	C	20	22	23	24	5'-11"	C	17	19	21	22
	3.5	3'-6"	A	7'-4"	C	19	21	22	23	8'-8"	D	21	21	23	24	5'-4"	C	17	19	21	22
	4	3'-0"	A	6'-9"	C	20	20	22	23	8'-1"	D	21	21	22	24	4'-10"	C	18	19	20	22
	4.5	2'-8"	A	6'-3"	C	20	20	21	23	7'-7"	D	21	21	22	23	4'-5"	C	18	19	20	21
	5	2'-5"	A	5'-11"	D	20	20	21	23	7'-1"	D	22	22	22	23	4'-1"	C	18	18	20	21
	5.5	2'-2"	A	5'-7"	D	21	21	21	22	6'-9"	D	22	22	22	23	3'-10"	C	18	18	20	21
	6	2'-0"	A	5'-3"	D	21	21	21	22	6'-5"	D	22	22	22	23	3'-7"	C	18	18	19	21
	6.5	1'-10"	A	5'-0"	D	21	21	21	22	6'-1"	D	22	22	22	23	3'-5"	C	18	18	19	21
	7	1'-9"	A	4'-9"	D	21	21	21	22	5'-10"	D	23	23	23	23	3'-2"	C	19	19	19	20

TABLE 5.2 TRIBUTARY WIDTHS FOR SINGLE SPAN ATTACHED STRUCTURES

OVER-HANG (FT)	PROJECTION OF SINGLE SPAN STUCTURES (FT) 8'	9'	10'	11'	12'	13'	14'	15'	16'	17'	18'	19'	20'	21'	22'
0'	4'	4.5'	5'	5.5'	6'	6.5'	7'	7.5'	8'	8.5'	9'	9.5'	10'	10.5'	11'
1'	4.5'	5'	5.5'	6'	6.5'	7'	7.5'	8'	8.5'	9'	9.5'	10'	10.5'	11'	11.5'
2'	5'	5.5'	6'	6.5'	7'	7.5'	8'	8.5'	9'	9.5'	10'	10.5'	11'	11.5'	12'
3'	5.5'	6'	6.5'	7'	7.5'	8'	8.5'	9'	9.5'	10'	10.5'	11'	11.5'	12'	12.5'
4'	6'	6.5'	7'	7.5'	8'	8.5'	9'	9.5'	10'	10.5'	11'	11.5'	12'	12.5'	13'
5'	6.5'	7'	7.5'	8'	8.5'	9'	9.5'	10'	10.5'	11'	11.5'	12'	12.5'	13'	13.5'

TABLE 5.3 Post Requirements for Attached Structures

Post Description	Max Hgt	POST
Twin 0.062"x1.5"x1.5" ScrolL	9'	A
0.042"x3"x8" Aluminum Post	11'	B
0.024"Post with Sideplates	12'	B
Clover 0.032"x3"x3" Alum	12'	B
Clover 0.040"x3"x3" Alum	12'	B
Colonial 0.062" Extruded	12'	C
0.041"x3"x3" Steel Clover	12'	D
0.041"x3"x3" Steel Clover	8'	E
3/16"x3"x3" Steel Square	15'	F
3/16"x4"x4" Steel Square	18'	G
5/16"x4"x4" Steel Square	18'	H

TABLE 5.4 Post Requirements for Freestanding Structures

Post Description	Maximum Footing	Max Height	POST
0.041"x3"x3" Steel Clover	d = 23"	12'	D
0.041"x3"x3" Steel Clover	d = 23"	8'	E
3/16"x3"x3" Steel Square	d = 32"	15'	F
3/16"x4"x4" Steel Square	d = 38"	18'	G
5/16"x4"x4" Steel Square	d = 42"	18'	H

GENERAL INSTRUCTIONS FOR THESE TABLES

1. CHOOSE FREESTANDING OR ATTACHED STRUCTURE
2. CHOOSE PROJECTION, WIDTH AND OVERHANG OF UNIT
3. DETERMINE WIND AND LIVE OR SNOW LOAD OF STRUCTURE SITE (PATIO UNITS USE 10 PSF MIN, COMMERCIAL UNITS USE 20PSF MIN)
4. CHOOSE A PANEL FROM **TABLES 4.1** TO **4.8** THAT HAS ADEQUATE CLEARSPAN FOR YOUR NEEDS.
5. DETERMINE TRIBUTARY WIDTH FROM TABLE 5.2 OR CALCULATE FROM TRIBUTARY DIAGRAM ON**SC02 PAGE 2 OF 2**
6. CHOOSE A HEADER FROM TABLE 5.7 THAT HAS ADEQUATE POST SPACING.
7. USE THE APPROPRIATE FOOTER SIZE SHOWN.
8. FOR SINGLE SPAN ATTACHED UNIT USE THE POST SHOWN UPGRADE THE POST IF THE HEIGHT IS NOT SUFFICIENT FREESTANDING AND MULTISPAN UNITS USE TABLE 5.4
9. FIND THE O/C SPACING OR # OF FASTENERS FOR ATTACHING TO WALL FROM TABLE 7.5
10. USE THE APPROPRIATE DETAILS

FOR PATIO SLABS FOLLOW 1-6 FROM ABOVE THEN

SLAB 7. DETERMINE MAXIMUM POST SPACING ON SLAB FROM TABLE 5.7
SLAB 8. USE THE SMALLER OF THE POST SPACING ON SLAB OR HEADER POST SPACING
SLAB 9. FOLLOW **9-11** FROM ABOVE
SLAB 10. FOR **TWO** POST STRUCTURES USE **TABLE 7.1** ON SHEET **M3** FOR SLAB REQUIREMENTS INSTEAD OF THESE TABLES
SLAB11. CHECK TABLES **SLAB1** AND **SLAB2** ON **M5** FOR CORNER DISTANCE REQUIRMENTS.

Amerimax Building Products
5208 Tennyson Parkway
Plano, Texas 75024

Carl Putnam, P. E.
3441 Ivylink Place
Lynchburg, VA 24503
carlputnam@comcast.net

REGISTERED PROFESSIONAL ENGINEER
CARL PUTNAM
C 68139
EXP. 6/30/2009
CIVIL
STATE OF CALIFORNIA

4/27/2009

SOLID COVER 5.0 POST SPACINGS FOR PATIO AND COMMERCIAL COVERS 90 MPH WIND AREAS

TABLE 5.8

GROUND SNOW LOAD (PSF)	TRIB WIDTH (FT)	MAX POST SPACING ON SLAB (FT)	POST REQ'D FOR SLAB	4"x3" I Beam (Detail Y) MAX POST SPACING (FT)	Attached Structure MIN POST TYPE	Attached Structure FOOTER SIZE "d" (in)	Freestanding or Multispan Units MAX POST LENGTH 8' CONSTRAINED FOOTER "d" (in)	12' CONSTRAINED FOOTER "d" (in)	18' CONSTRAINED FOOTER "d" (in)	7"x4" I Beam (Detail Q) MAX POST SPACING (FT)	Attached Structure MIN POST TYPE	Attached Structure FOOTER SIZE "d" (in)	Freestanding or Multispan Units MAX POST LENGTH 8' CONSTRAINED FOOTER "d" (in)	12' CONSTRAINED FOOTER "d" (in)	18' CONSTRAINED FOOTER "d" (in)	12 Gau 3.5"x10" Steel C Beam (Detail T) MAX POST SPACING (FT)	Attached Structure MIN POST TYPE	Attached Structure FOOTER SIZE "d" (in)	Freestanding or Multispan Units MAX POST LENGTH 8' CONSTRAINED FOOTER "d" (in)	12' CONSTRAINED FOOTER "d" (in)	18' CONSTRAINED FOOTER "d" (in)
90 MPH EXPOSURE B																					
10 LIVE	3	22'-8"	A	11'-9"	A	19	21	23		16'-4"	A	21	25	27		30'-0"	B	26	30	34	
	3.5	19'-5"	A	11'-4"	A	19	21	23		15'-8"	A	22	24	27		30'-0"	C	27	30	34	
	4	17'-0"	A	11'-0"	A	20	21	23		15'-1"	A	22	24	27		30'-0"	C	28	30	34	
	4.5	15'-1"	A	10'-8"	A	21	21	23		14'-8"	A	23	24	27		28'-9"	C	29	30	33	
	5	13'-7"	A	10'-4"	A	21	21	23		14'-4"	B	24	24	27		27'-8"	C	29	30	33	
	5.5	12'-4"	A	10'-1"	A	22	22	23		14'-0"	B	24	24	26		26'-3"	C	30	30	33	
	6	11'-4"	A	9'-11"	A	22	22	23		13'-8"	B	25	25	26		25'-6"	C	30	30	32	
	6.5	10'-5"	A	9'-9"	A	23	23	23		13'-4"	B	25	25	26		24'-4"	C	31	31	32	
	7	9'-8"	A	9'-6"	A	23	23	23		13'-1"	C	26	26	26		23'-8"	D	31	31	32	
	7.5	9'-1"	A	9'-4"	B	24	24	24		12'-11"	C	26	26	26		22'-11"	D	32	32	32	
	8	8'-6"	A	9'-2"	B	24	24	24		12'-8"	C	27	27	27		22'-2"	D	32	32	32	
	8.5	8'-0"	A	9'-1"	B	24	24	24		12'-6"	C	27	27	27		21'-6"	D	32	32	32	
	9	7'-6"	A	8'-11"	B	25	25	25		12'-4"	C	27	27	27		21'-1"	D	33	33	33	
	9.5	7'-2"	A	8'-10"	B	25	25	25		12'-2"	C	28	28	28		20'-5"	D	33	33	33	
	10	6'-9"	A	8'-8"	B	25	25	25		12'-0"	C	28	28	28		20'-3"	D	34	34	34	
	11	6'-2"	A	8'-6"	C	26	26	26		11'-9"	C	29	29	29		20'-0"	D	34	34	34	
	12	5'-8"	A	8'-4"	C	26	26	26		11'-6"	C	30	30	30		19'-10"	D	35	35	35	
	13	5'-2"	A	8'-0"	C	27	27	27		11'-2"	C	30	30	30		19'-7"	D	36	36	36	
90 MPH EXPOSURE C																					
10 LIVE	3	22'-8"	A	11'-0"	A	21	23	26		15'-3"	A	23	27	30		30'-0"	B	29	34	37	
	3.5	19'-5"	A	10'-8"	A	22	23	25		14'-7"	A	24	27	30		30'-0"	C	31	34	37	
	4	17'-0"	A	10'-4"	A	23	23	25		14'-3"	A	25	26	29		29'-1"	C	32	33	37	
	4.5	15'-1"	A	10'-0"	A	23	23	25		13'-10"	A	26	26	29		27'-8"	C	33	33	37	
	5	13'-7"	A	9'-9"	A	24	24	25		13'-4"	A	27	27	29		26'-3"	C	33	33	36	
	5.5	12'-4"	A	9'-5"	A	24	24	25		13'-1"	B	27	27	29		25'-1"	C	34	34	36	
	6	11'-4"	A	9'-3"	A	25	25	25		12'-10"	B	28	28	29		24'-1"	C	34	34	35	
	6.5	10'-5"	A	9'-1"	A	26	26	26		12'-7"	B	28	28	29		23'-2"	C	35	35	35	
	7	9'-8"	A	8'-11"	A	26	26	26		12'-4"	B	29	29	29		22'-5"	C	35	35	35	
	7.5	9'-1"	A	8'-9"	A	27	27	27		12'-2"	B	30	30	30		22'-2"	D	36	36	36	
	8	8'-6"	A	8'-7"	B	27	27	27		11'-10"	C	30	30	30		21'-11"	D	37	37	37	
	8.5	8'-0"	A	8'-6"	B	27	27	27		11'-9"	C	30	30	30		21'-6"	D	37	37	37	
	9	7'-6"	A	8'-4"	B	28	28	28		11'-6"	C	31	31	31		21'-1"	D	38	38	38	
	9.5	7'-2"	A	8'-3"	B	28	28	28		11'-5"	C	31	31	31		20'-5"	D	38	38	38	
	10	6'-9"	A	8'-1"	B	28	28	28		11'-3"	C	32	32	32		20'-3"	D	39	39	39	
	11	6'-2"	A	7'-11"	B	29	29	29		11'-0"	C	32	32	32		20'-0"	D	40	40	40	
	12	5'-8"	A	7'-10"	C	30	30	30		10'-9"	C	33	33	33		19'-10"	D	41	41	41	
	13	5'-2"	A	7'-7"	C	30	30	30		10'-6"	C	34	34	34		19'-7"	D	42	42	42	
90 MPH EXPOSURE B																					
20 LIVE	3	11'-10"	A	11'-9"	A	19	21	23	27	16'-4"	C	21	25	27	31	26'-0"	C	24	29	33	36
	3.5	10'-2"	A	11'-4"	B	19	21	23	27	15'-8"	C	22	24	27	31	24'-2"	C	25	29	32	36
	4	8'-11"	A	10'-10"	B	20	20	23	27	15'-1"	C	22	24	27	31	22'-8"	D	26	28	32	35
	4.5	7'-11"	A	10'-5"	B	21	21	23	26	14'-8"	C	23	24	27	30	21'-6"	D	26	28	31	35
	5	7'-1"	A	10'-1"	C	21	21	23	26	14'-4"	C	24	24	27	30	20'-11"	D	27	28	31	35
	5.5	6'-5"	A	9'-6"	C	21	21	22	26	14'-0"	C	24	24	26	30	20'-8"	D	28	28	31	35
	6	5'-11"	A	8'-11"	C	22	22	22	26	13'-7"	C	25	25	26	30	20'-3"	D	28	28	31	34
	6.5	5'-5"	A	8'-5"	C	22	22	22	26	12'-9"	C	25	25	26	30	20'-2"	D	29	29	31	34
	7	5'-1"	A	7'-11"	C	22	22	22	25	12'-1"	D	25	25	26	29	19'-11"	D	30	30	31	34
	7.5	4'-9"	A	7'-6"	C	22	22	22	25	11'-6"	D	25	25	25	29	19'-8"	D	30	30	31	34
	8	4'-5"	A	7'-1"	C	22	22	22	25	10'-11"	D	25	25	25	29	19'-5"	D	31	31	31	34
	8.5	4'-2"	A	6'-9"	C	22	22	22	25	10'-5"	D	25	25	25	28	19'-3"	D	31	31	31	34
	9	3'-11"	A	6'-6"	C	22	22	22	25	9'-11"	D	26	26	26	28	19'-1"	E	32	32	32	34
	9.5	3'-9"	A	6'-2"	C	22	22	22	25	9'-6"	D	26	26	26	28	18'-11"	E	32	32	32	34
	10	3'-6"	A	5'-11"	C	22	22	22	24	9'-1"	D	26	26	26	28	19'-0"	E	33	33	33	34
	11	3'-2"	A	5'-6"	C	22	22	22	24	8'-5"	D	26	26	26	27	19'-0"	E	34	34	34	34
	12	2'-11"	A	5'-1"	C	22	22	22	24	7'-10"	D	26	26	26	27	19'-2"	E	35	35	35	35
	13	2'-8"	A	4'-9"	C	23	23	23	24	7'-4"	D	26	26	26	27	19'-2"	E	36	36	36	36

TABLE 5.8

GROUND SNOW LOAD (PSF)	TRIB WIDTH (FT)	MAX POST SPACING ON SLAB (FT)	POST REQ'D FOR SLAB	4"x3" I Beam (Detail Y) MAX POST SPACING (FT)	Attached Structure MIN POST TYPE	Attached Structure FOOTER SIZE "d" (in)	Freestanding or Multispan Units MAX POST LENGTH 8' CONSTRAINED FOOTER "d" (in)	12' CONSTRAINED FOOTER "d" (in)	18' CONSTRAINED FOOTER "d" (in)	7"x4" I Beam (Detail Q) MAX POST SPACING (FT)	Attached Structure MIN POST TYPE	Attached Structure FOOTER SIZE "d" (in)	Freestanding or Multispan Units MAX POST LENGTH 8' CONSTRAINED FOOTER "d" (in)	12' CONSTRAINED FOOTER "d" (in)	18' CONSTRAINED FOOTER "d" (in)	12 Gau 3.5"x10" Steel C Beam (Detail T) MAX POST SPACING (FT)	Attached Structure MIN POST TYPE	Attached Structure FOOTER SIZE "d" (in)	Freestanding or Multispan Units MAX POST LENGTH 8' CONSTRAINED FOOTER "d" (in)	12' CONSTRAINED FOOTER "d" (in)	18' CONSTRAINED FOOTER "d" (in)
90 MPH EXPOSURE B																					
30	3	8'-0"	A	11'-1"	C	18	21	23	27	16'-4"	C	21	25	27	31	23'-5"	D	24	29	32	36
	3.5	6'-10"	A	10'-6"	C	19	20	23	26	15'-8"	C	22	24	27	31	21'-11"	D	24	28	31	35
	4	6'-0"	A	10'-0"	C	20	20	23	26	15'-1"	D	22	24	27	31	21'-1"	D	25	28	31	35
	4.5	5'-4"	A	9'-5"	C	20	20	22	26	14'-3"	D	23	24	27	30	20'-8"	D	26	28	31	35
	5	4'-10"	A	8'-8"	C	20	20	22	26	13'-3"	D	23	23	26	30	20'-4"	D	27	28	31	35
	5.5	4'-4"	A	8'-1"	C	20	20	22	25	12'-4"	D	23	23	26	29	20'-0"	D	27	28	31	34
	6	4'-0"	A	7'-6"	C	20	20	21	25	11'-6"	D	23	23	25	29	19'-10"	E	28	28	31	34
	6.5	3'-8"	A	7'-1"	C	20	20	21	25	10'-10"	D	24	24	25	29	19'-6"	E	29	29	30	34
	7	3'-5"	A	6'-8"	C	21	21	21	25	10'-2"	D	24	24	25	28	19'-5"	E	29	29	30	34
	7.5	3'-2"	A	6'-3"	C	21	21	21	25	9'-8"	D	24	24	24	28	19'-2"	E	30	30	30	34
	8	3'-0"	A	5'-11"	C	21	21	21	24	9'-2"	D	24	24	24	28	19'-1"	E	30	30	30	34
	8.5	2'-10"	A	5'-8"	C	21	21	21	24	8'-8"	D	24	24	24	28	18'-11"	E	31	31	31	34
	9	2'-8"	A	5'-5"	C	21	21	21	24	8'-3"	D	24	24	24	27	19'-0"	E	32	32	32	34
	9.5	2'-6"	A	5'-2"	C	21	21	21	24	7'-11"	D	24	24	24	27	19'-1"	E	32	32	32	34
90 MPH EXPOSURE C																					
30	3	8'-0"	A	11'-0"	C	21	23	26	30	15'-3"	C	23	27	30	34	23'-5"	D	27	32	35	39
	3.5	6'-10"	A	10'-6"	C	22	23	25	29	14'-7"	C	24	27	30	34	21'-11"	D	28	31	35	39
	4	6'-0"	A	10'-0"	C	22	22	25	29	14'-3"	C	25	26	29	33	21'-1"	D	29	31	34	39
	4.5	5'-4"	A	9'-5"	C	23	23	25	29	13'-10"	D	26	26	29	33	20'-8"	D	30	31	34	38
	5	4'-10"	A	8'-8"	C	23	23	24	29	13'-3"	D	27	27	29	33	20'-4"	D	31	31	34	38
	5.5	4'-4"	A	8'-1"	C	23	23	24	28	12'-4"	D	27	27	29	33	20'-0"	D	31	31	34	38
	6	4'-0"	A	7'-6"	C	23	23	24	28	11'-6"	D	27	27	28	32	19'-10"	E	32	32	34	38
	6.5	3'-8"	A	7'-1"	C	24	24	24	28	10'-10"	D	27	27	28	32	19'-6"	E	33	33	34	38
	7	3'-5"	A	6'-8"	C	24	24	24	27	10'-2"	D	27	27	27	31	19'-5"	E	34	34	34	38
	7.5	3'-2"	A	6'-3"	C	24	24	24	27	9'-8"	D	27	27	27	31	19'-2"	E	34	34	34	38
	8	3'-0"	A	5'-11"	C	24	24	24	27	9'-2"	D	27	27	27	31	19'-1"	E	35	35	35	38
	8.5	2'-10"	A	5'-8"	C	24	24	24	27	8'-8"	D	28	28	28	31	18'-11"	E	36	36	36	38
	9	2'-8"	A	5'-5"	C	24	24	24	27	8'-3"	D	28	28	28	30	19'-0"	E	36	36	36	38
	9.5	2'-6"	A	5'-2"	C	24	24	24	27	7'-11"	D	28	28	28	30	19'-1"	E	37	37	37	38
90 MPH EXPOSURE C																					
40	3	6'-1"	A	10'-0"	C	20	22	25	29	15'-3"	D	23	27	30	34	21'-1"	D	26	31	34	39
	3.5	5'-2"	A	9'-2"	C	21	22	25	29	14'-0"	D	24	26	29	33	20'-7"	D	27	31	34	38
	4	4'-6"	A	8'-4"	C	21	21	24	28	12'-8"	D	24	26	29	33	20'-2"	D	28	31	34	38
	4.5	4'-0"	A	7'-7"	C	21	21	24	28	11'-7"	D	25	25	28	32	19'-10"	E	29	31	34	38
	5	3'-7"	A	7'-0"	C	21	21	24	28	10'-8"	D	25	25	28	32	19'-6"	E	30	30	34	38
	5.5	3'-3"	A	6'-5"	C	22	22	23	27	9'-11"	D	25	25	27	31	19'-4"	E	31	31	34	38
	6	3'-0"	A	6'-0"	C	22	22	23	27	9'-3"	D	25	25	27	31	19'-2"	E	32	32	34	38
	6.5	2'-9"	A	5'-7"	C	22	22	23	27	8'-8"	D	25	25	27	31	19'-1"	E	33	33	34	38
	7	2'-7"	A	5'-3"	C	22	22	22	27	8'-1"	D	25	25	26	30	19'-2"	E	34	34	34	38
	7.5	2'-5"	A	5'-0"	C	22	22	22	27	7'-8"	D	25	25	26	30	19'-1"	E	34	34	34	38
	8	2'-3"	A	4'-8"	C	22	22	22	26	7'-3"	D	25	25	26	30	19'-1"	E	35	35	35	38
	8.5	2'-1"	A	4'-5"	C	22	22	22	26	6'-11"	D	25	25	25	29	19'-1"	E	36	36	36	38
	9	2'-0"	A	4'-3"	C	22	22	22	26	6'-7"	D	26	26	26	29	19'-1"	E	36	36	36	38
90 MPH EXPOSURE B																					
40	3	6'-1"	A	10'-0"	C	18	20	23	26	15'-8"	D	21	24	27	31						
	3.5	5'-2"	A	9'-2"	C	18	20	22	26	14'-0"	D	21	24	26	30						
	4	4'-6"	A	8'-4"	C	18	19	22	26	12'-8"	D	21	23	26	30						
	4.5	4'-0"	A	7'-7"	C	19	19	22	25	11'-7"	D	21	23	25	29						
	5	3'-7"	A	7'-0"	C	19	19	21	25	10'-8"	D	21	22	25	29						
	5.5	3'-3"	A	6'-5"	C	19	19	21	25	9'-11"	D	22	22	25	28						
	6	3'-0"	A	6'-0"	C	19	19	21	24	9'-3"	D	22	22	24	28						
	6.5	2'-9"	A	5'-7"	C	19	19	20	24	8'-8"	D	22	22	24	28						
	7	2'-7"	A	5'-3"	C	19	19	20	24	8'-1"	D	22	22	24	27						
	7.5	2'-5"	A	5'-0"	C	19	19	20	24	7'-8"	D	22	22	23	27						
	8	2'-3"	A	4'-8"	C	19	19	20	24	7'-3"	D	22	22	23	27						
	8.5	2'-1"	A	4'-5"	C	19	19	20	24	6'-11"	D	22	22	23	27						
	9	2'-0"	A	4'-3"	C	19	19	20	24	6'-7"	D	22	22	23	26						

4/27/2009

SOLID COVER 5.0 POST SPACINGS FOR PATIO AND COMMERCIAL COVERS 90 MPH WIND AREAS

TABLE 5.8

GROUND SNOW LOAD (PSF)	TRIB WIDTH (FT)	MAX POST SPACING ON SLAB (FT)	POST REQ'D FOR SLAB	4"x3" I Beam (Detail Y) MAX POST SPACING (FT)	Attached Structure MIN POST TYPE	Attached Structure FOOTER SIZE "d" (in)	Freestanding or Multispan Units MAX POST LENGTH 8' CONSTRAINED FOOTER "d" (in)	12' CONSTRAINED FOOTER "d" (in)	18' CONSTRAINED FOOTER "d" (in)	7"x4" I Beam (Detail Q) MAX POST SPACING (FT)	Attached Structure MIN POST TYPE	Attached Structure FOOTER SIZE "d" (in)	Freestanding or Multispan Units MAX POST LENGTH 8' CONSTRAINED FOOTER "d" (in)	12' CONSTRAINED FOOTER "d" (in)	18' CONSTRAINED FOOTER "d" (in)	12 Gau 3.5"x10" Steel C Beam (Detail T) MAX POST SPACING (FT)	Attached Structure MIN POST TYPE	Attached Structure FOOTER SIZE "d" (in)	Freestanding or Multispan Units MAX POST LENGTH 8' CONSTRAINED FOOTER "d" (in)	12' CONSTRAINED FOOTER "d" (in)	18' CONSTRAINED FOOTER "d" (in)
90 MPH EXPOSURE C																					
20 LIVE	3	11'-10"	A	11'-0"	A	21	23	26	30	15'-3"	B	23	27	30	34	26'-0"	C	28	33	36	40
	3.5	10'-2"	A	10'-8"	B	22	23	25	29	14'-7"	C	24	27	30	34	24'-2"	C	29	32	35	40
	4	8'-11"	A	10'-4"	B	23	23	25	29	14'-3"	C	25	26	29	33	22'-8"	D	29	32	35	39
	4.5	7'-11"	A	10'-0"	B	23	23	25	29	13'-10"	C	26	26	29	33	21'-6"	D	30	31	35	39
	5	7'-1"	A	9'-9"	C	24	24	25	29	13'-4"	C	27	27	29	33	20'-11"	D	31	31	34	39
	5.5	6'-5"	A	9'-5"	C	24	24	25	29	13'-1"	C	27	27	29	33	20'-8"	D	32	32	34	38
	6	5'-11"	A	8'-11"	C	25	25	25	29	12'-10"	C	28	28	29	33	20'-3"	D	33	33	34	38
	6.5	5'-5"	A	8'-5"	C	25	25	25	28	12'-7"	C	28	28	29	33	20'-2"	D	33	33	34	38
	7	5'-1"	A	7'-11"	C	25	25	25	28	12'-1"	D	29	29	29	32	19'-11"	D	34	34	34	38
	7.5	4'-9"	A	7'-6"	C	25	25	25	28	11'-6"	D	29	29	29	32	19'-8"	D	35	35	35	38
	8	4'-5"	A	7'-1"	C	25	25	25	28	10'-11"	D	29	29	29	32	19'-5"	D	35	35	35	38
	8.5	4'-2"	A	6'-9"	C	25	25	25	28	10'-5"	D	29	29	29	32	19'-3"	D	36	36	36	38
	9	3'-11"	A	6'-6"	C	25	25	25	27	9'-11"	D	29	29	29	31	19'-1"	E	36	36	36	38
	9.5	3'-9"	A	6'-2"	C	26	26	26	27	9'-6"	D	29	29	29	31	18'-11"	E	37	37	37	38
	10	3'-6"	A	5'-11"	C	26	26	26	27	9'-1"	D	30	30	30	31	19'-0"	E	38	38	38	38
	11	3'-2"	A	5'-6"	C	26	26	26	27	8'-5"	D	30	30	30	30	19'-0"	E	39	39	39	39
90 MPH EXPOSURE B																					
25	3	9'-7"	A	11'-9"	B	19	21	23	27	16'-4"	C	21	25	27	31	25'-6"	D	24	29	32	36
	3.5	8'-2"	A	11'-2"	C	19	21	23	27	15'-8"	C	22	24	27	31	23'-8"	D	25	29	32	36
	4	7'-2"	A	10'-8"	C	20	20	23	27	15'-1"	C	22	24	27	31	22'-5"	D	26	28	31	35
	4.5	6'-4"	A	10'-3"	C	20	20	23	26	14'-8"	C	23	24	27	30	21'-1"	D	26	28	31	35
	5	5'-9"	A	9'-10"	C	21	21	23	26	14'-4"	D	24	24	27	30	20'-9"	D	27	28	31	35
	5.5	5'-2"	A	9'-2"	C	21	21	22	26	14'-0"	D	24	24	26	30	20'-6"	D	28	28	31	35
	6	4'-9"	A	8'-7"	C	21	21	22	26	13'-1"	D	24	24	26	30	20'-2"	D	28	28	31	34
	6.5	4'-5"	A	8'-1"	C	21	21	22	25	12'-4"	D	25	25	26	29	20'-1"	D	29	29	31	34
	7	4'-1"	A	7'-8"	C	22	22	22	25	11'-8"	D	25	25	25	29	19'-10"	E	30	30	31	34
	7.5	3'-10"	A	7'-3"	C	22	22	22	25	11'-1"	D	25	25	25	29	19'-7"	E	30	30	30	34
	8	3'-7"	A	6'-10"	C	22	22	22	25	10'-6"	D	25	25	25	28	19'-4"	E	31	31	31	34
	8.5	3'-4"	A	6'-6"	C	22	22	22	25	10'-0"	D	25	25	25	28	19'-2"	E	31	31	31	34
	9	3'-2"	A	6'-3"	C	22	22	22	25	9'-7"	D	25	25	25	28	19'-0"	E	32	32	32	34
	9.5	3'-0"	A	5'-11"	C	22	22	22	24	9'-2"	D	25	25	25	28	19'-1"	E	32	32	32	34
90 MPH EXPOSURE C																					
25	3	9'-7"	A	11'-0"	B	21	23	26	30	15'-3"	C	23	27	30	34	25'-6"	D	28	32	36	40
	3.5	8'-2"	A	10'-8"	B	22	23	25	29	14'-7"	C	24	27	30	34	23'-8"	D	29	32	35	40
	4	7'-2"	A	10'-4"	C	23	23	25	29	14'-3"	C	25	26	29	33	22'-5"	D	29	31	35	39
	4.5	6'-4"	A	10'-0"	C	23	23	25	29	13'-10"	C	26	26	29	33	21'-1"	D	30	31	34	39
	5	5'-9"	A	9'-9"	C	24	24	25	29	13'-4"	C	27	27	29	33	20'-9"	D	31	31	34	38
	5.5	5'-2"	A	9'-2"	C	24	24	25	29	13'-1"	D	27	27	29	33	20'-6"	D	32	32	34	38
	6	4'-9"	A	8'-7"	C	24	24	24	28	12'-10"	D	28	28	29	33	20'-2"	D	32	32	34	38
	6.5	4'-5"	A	8'-1"	C	25	25	25	28	12'-4"	D	28	28	29	33	20'-1"	D	33	33	34	38
	7	4'-1"	A	7'-8"	C	25	25	25	28	11'-8"	D	28	28	28	32	19'-10"	E	34	34	34	38
	7.5	3'-10"	A	7'-3"	C	25	25	25	28	11'-1"	D	29	29	29	32	19'-7"	E	35	35	35	38
	8	3'-7"	A	6'-10"	C	25	25	25	28	10'-6"	D	29	29	29	32	19'-4"	E	35	35	35	38
	8.5	3'-4"	A	6'-6"	C	25	25	25	27	10'-0"	D	29	29	29	31	19'-2"	E	36	36	36	38
	9	3'-2"	A	6'-3"	C	25	25	25	27	9'-7"	D	29	29	29	31	19'-0"	E	36	36	36	38
	9.5	3'-0"	A	5'-11"	C	25	25	25	27	9'-2"	D	29	29	29	31	19'-1"	E	37	37	37	38
	10	2'-10"	A	5'-8"	C	25	25	25	27	8'-9"	D	29	29	29	31	19'-1"	E	38	38	38	38

TABLE 5.8

GROUND SNOW LOAD (PSF)	TRIB WIDTH (FT)	MAX POST SPACING ON SLAB (FT)	POST REQ'D FOR SLAB	4"x3" I Beam (Detail Y) MAX POST SPACING (FT)	Attached Structure MIN POST TYPE	Attached Structure FOOTER SIZE "d" (in)	Freestanding or Multispan Units MAX POST LENGTH 8' CONSTRAINED FOOTER "d" (in)	12' CONSTRAINED FOOTER "d" (in)	18' CONSTRAINED FOOTER "d" (in)	7"x4" I Beam (Detail Q) MAX POST SPACING (FT)	Attached Structure MIN POST TYPE	Attached Structure FOOTER SIZE "d" (in)	Freestanding or Multispan Units MAX POST LENGTH 8' CONSTRAINED FOOTER "d" (in)	12' CONSTRAINED FOOTER "d" (in)	18' CONSTRAINED FOOTER "d" (in)	12 Gau 3.5"x10" Steel C Beam (Detail T) MAX POST SPACING (FT)	Attached Structure MIN POST TYPE	Attached Structure FOOTER SIZE "d" (in)	Freestanding or Multispan Units MAX POST LENGTH 8' CONSTRAINED FOOTER "d" (in)	12' CONSTRAINED FOOTER "d" (in)	18' CONSTRAINED FOOTER "d" (in)
90 MPH EXPOSURE B																					
60	3	4'-1"	A	7'-8"	C	16	19	22	25	11'-8"	D	19	23	25	29	20'-0"	E	22	28	31	34
	3.5	3'-6"	A	6'-9"	C	16	19	21	25	10'-4"	D	19	22	25	28	19'-7"	E	23	27	31	34
	4	3'-0"	A	6'-1"	C	17	18	21	25	9'-4"	D	19	22	24	28	19'-2"	E	24	27	30	34
	4.5	2'-8"	A	5'-6"	C	17	18	20	24	8'-5"	D	19	21	24	27	19'-0"	E	25	27	30	34
	5	2'-5"	A	5'-0"	C	17	18	20	24	7'-9"	D	19	21	23	27	19'-0"	E	26	27	30	34
	5.5	2'-2"	A	4'-7"	C	17	17	20	24	7'-2"	D	19	21	23	27	19'-1"	E	27	27	30	34
	6	2'-0"	A	4'-3"	C	17	17	20	24	6'-7"	D	19	20	23	26	19'-0"	E	28	28	30	34
	6.5	1'-10"	A	4'-0"	C	17	17	19	23	6'-2"	D	20	20	22	26	18'-5"	F	28	28	30	34
	7	1'-9"	A	3'-9"	C	17	17	19	23	5'-9"	D	20	20	22	26	17'-9"	F	28	28	30	34
	7.5	1'-7"	A	3'-6"	C	17	17	19	23	5'-5"	D	20	20	22	26	17'-2"	F	29	29	30	33
	8	1'-6"	A	3'-3"	C	17	17	19	23	5'-1"	D	20	20	22	25	16'-7"	F	29	29	29	33
	8.5	1'-5"	A	3'-1"	C	17	17	19	23	4'-10"	D	20	20	21	25	16'-1"	G	29	29	29	33
90 MPH EXPOSURE C																					
60	3	4'-1"	A	7'-8"	C	19	21	24	28	11'-8"	D	21	25	28	32	20'-0"	E	26	31	34	38
	3.5	3'-6"	A	6'-9"	C	19	21	23	28	10'-4"	D	22	25	28	32	19'-7"	E	27	30	34	38
	4	3'-0"	A	6'-1"	C	19	20	23	27	9'-4"	D	22	24	27	31	19'-2"	E	28	30	34	38
	4.5	2'-8"	A	5'-6"	C	19	20	23	27	8'-5"	D	22	24	26	30	19'-0"	E	29	30	34	38
	5	2'-5"	A	5'-0"	C	19	20	22	27	7'-9"	D	22	23	26	30	19'-0"	E	30	30	34	38
	5.5	2'-2"	A	4'-7"	C	19	19	22	26	7'-2"	D	22	23	26	30	19'-1"	E	31	31	34	38
	6	2'-0"	A	4'-3"	C	19	19	22	26	6'-7"	D	22	22	25	29	19'-0"	E	32	32	34	38
	6.5	1'-10"	A	4'-0"	C	19	19	22	26	6'-2"	D	22	22	25	29	18'-5"	F	32	32	33	37
	7	1'-9"	A	3'-9"	C	20	20	21	26	5'-9"	D	23	23	25	29	17'-9"	F	33	33	33	37

TABLE 5.2 TRIBUTARY WIDTHS FOR SINGLE SPAN ATTACHED STRUCTURES

OVER-HANG (FT)	PROJECTION OF SINGLE SPAN STUCTURES (FT) 8'	9'	10'	11'	12'	13'	14'	15'	16'	17'	18'	19'	20'	21'	22'
0'	4'	4.5'	5'	5.5'	6'	6.5'	7'	7.5'	8'	8.5'	9'	9.5'	10'	10.5'	11'
1'	4.5'	5'	5.5'	6'	6.5'	7'	7.5'	8'	8.5'	9'	9.5'	10'	10.5'	11'	11.5'
2'	5'	5.5'	6'	6.5'	7'	7.5'	8'	8.5'	9'	9.5'	10'	10.5'	11'	11.5'	12'
3'	5.5'	6'	6.5'	7'	7.5'	8'	8.5'	9'	9.5'	10'	10.5'	11'	11.5'	12'	12.5'
4'	6'	6.5'	7'	7.5'	8'	8.5'	9'	9.5'	10'	10.5'	11'	11.5'	12'	12.5'	13'
5'	6.5'	7'	7.5'	8'	8.5'	9'	9.5'	10'	10.5'	11'	11.5'	12'	12.5'	13'	13.5'

TABLE 5.3 Post Requirements for Attached Structures

Post Description	Max Hgt	POST
Twin 0.062"x1.5"x1.5" ScrolL	9'	A
0.042"x3"x8" Aluminum Post	11'	B
0.024"Post with Sideplates	12'	B
Clover 0.032"x3"x3" Alum	12'	B
Clover 0.040"x3"x3" Alum	12'	B
Colonial 0.062" Extruded	12'	C
0.041"x3"x3" Steel Clover	12'	D
0.041"x3"x3" Steel Clover	8'	E
3/16"x3"x3" Steel Square	15'	F
3/16"x4"x4" Steel Square	18'	G
5/16"x4"x4" Steel Square	18'	H

TABLE 5.4 Post Requirements for Freestanding Structures

Post Description	Maximum Footing	Max Height	POST
0.041"x3"x3" Steel Clover	d = 23"	12'	D
0.041"x3"x3" Steel Clover	d = 23"	8'	E
3/16"x3"x3" Steel Square	d = 32"	15'	F
3/16"x4"x4" Steel Square	d = 38"	18'	G
5/16"x4"x4" Steel Square	d = 42"	18'	H

GENERAL INSTRUCTIONS FOR THESE TABLES

1. CHOOSE FREESTANDING OR ATTACHED STRUCTURE
2. CHOOSE PROJECTION, WIDTH AND OVERHANG OF UNIT
3. DETERMINE WIND AND LIVE OR SNOW LOAD OF STRUCTURE SITE (PATIO UNITS USE 10 PSF MIN, COMMERCIAL UNITS USE 20PSF MIN)
4. CHOOSE A PANEL FROM **TABLES 4.1** TO **4.8** THAT HAS ADEQUATE CLEARSPAN FOR YOUR NEEDS.
5. DETERMINE TRIBUTARY WIDTH FROM TABLE 5.2 OR CALCULATE FROM TRIBUTARY DIAGRAM ON**SC02 PAGE 2 OF 2**
6. CHOOSE A HEADER FROM TABLE 5.8 THAT HAS ADEQUATE POST SPACING.
7. USE THE APPROPRIATE FOOTER SIZE SHOWN.
8. FOR SINGLE SPAN ATTACHED UNIT USE THE POST SHOWN UPGRADE THE POST IF THE HEIGHT IS NOT SUFFICIENT FREESTANDING AND MULTISPAN UNITS USE TABLE 5.4
9. FIND THE O/C SPACING OR # OF FASTENERS FOR ATTACHING TO WALL FROM TABLE 7.5
10. USE THE APPROPRIATE DETAILS

FOR PATIO SLABS FOLLOW 1-6 FROM ABOVE THEN

SLAB 7. DETERMINE MAXIMUM POST SPACING ON SLAB FROM TABLE 5.8
SLAB 8. USE THE SMALLER OF THE POST SPACING ON SLAB OR HEADER POST SPACING
SLAB 9. FOLLOW **9-11** FROM ABOVE
SLAB 10. FOR **TWO** POST STRUCTURES USE **TABLE 7.1** ON SHEET **M3** FOR SLAB REQUIREMENTS INSTEAD OF THESE TABLES
SLAB11. CHECK TABLES **SLAB1** AND **SLAB2** ON **M5** FOR CORNER DISTANCE REQUIRMENTS.

Amerimax Building Products
5208 Tennyson Parkway
Plano, Texas 75024

Carl Putnam, P. E.
3441 Ivylink Place
Lynchburg, VA 24503
carlputnam@comcast.net

REGISTERED PROFESSIONAL ENGINEER
CARL PUTNAM
C 68139
EXP. 6/30/2009
CIVIL
STATE OF CALIFORNIA

4/27/2009

SOLID COVER 6.0 POST SPACINGS FOR PATIO AND COMMERCIAL COVERS HIGH WIND AREAS

TABLE 6.1

GROUND SNOW LOAD (PSF)	TRIB WIDTH (FT)	MAX POST SPACING ON SLAB (FT)	POST REQ'D FOR SLAB	0.042"x3"x8" Box Beam (Detail N30) MAX POST SPACING (FT)	Attached Structure MIN POST TYPE	Attached Structure FOOTER SIZE "d" (in)	Freestanding or Multispan Units MAX POST LENGTH CONSTRAINED FOOTER 8' "d" (in)	10' "d" (in)	12' "d" (in)	Double 0.042"x3"x8" Beam (Detail N25) MAX POST SPACING (FT)	Attached Structure MIN POST TYPE	Attached Structure FOOTER SIZE "d" (in)	Freestanding or Multispan Units MAX POST LENGTH CONSTRAINED FOOTER 8' "d" (in)	10' "d" (in)	12' "d" (in)	Double 0.032"x2"x6.625" Beam (Detail N25) MAX POST SPACING (FT)	Attached Structure MIN POST TYPE	Attached Structure FOOTER SIZE "d" (in)	Freestanding or Multispan Units MAX POST LENGTH CONSTRAINED FOOTER 8' "d" (in)	10' "d" (in)	12' "d" (in)
105 MPH EXPOSURE C																					
10 LIVE	3	22'-8"	A	11'-6"	A	24	28	29	31	18'-4"	A	28	31	33	34	12'-11"	A	25	27	29	31
	3.5	19'-5"	A	10'-5"	A	24	27	29	30	16'-11"	A	28	30	32	34	11'-11"	A	25	27	29	30
	4	17'-0"	A	9'-7"	A	25	27	28	30	15'-10"	A	29	30	32	33	11'-2"	A	26	27	28	30
	4.5	15'-1"	A	8'-10"	A	25	26	28	29	14'-11"	A	30	30	31	33	10'-5"	A	26	26	28	29
	5	13'-7"	A	8'-3"	A	25	26	27	29	14'-2"	B	30	30	31	32	9'-7"	A	27	27	27	29
	5.5	12'-4"	A	7'-8"	A	25	25	27	29	13'-6"	B	31	31	31	32	8'-11"	A	27	27	27	28
	6	11'-4"	A	7'-3"	A	26	26	27	28	12'-11"	B	31	31	31	32	8'-4"	A	27	27	27	28
	6.5	10'-5"	A	6'-10"	A	26	26	26	28	12'-5"	B	32	32	32	32	7'-10"	A	27	27	27	28
	7	9'-8"	A	6'-5"	A	26	26	26	28	11'-11"	B	32	32	32	32	7'-5"	A	27	27	27	27
	7.5	9'-1"	A	6'-1"	A	26	26	26	27	11'-6"	B	32	32	32	32	7'-0"	A	27	27	27	27
	8	8'-6"	A	5'-10"	A	26	26	26	27	11'-2"	B	33	33	33	33	6'-7"	A	27	27	27	27
	8.5	8'-0"	A	5'-7"	A	26	26	26	27	10'-8"	B	33	33	33	33	6'-3"	A	28	28	28	28
	9	7'-6"	A	5'-4"	A	27	27	27	27	10'-3"	C	33	33	33	33	6'-0"	A	28	28	28	28
	9.5	7'-2"	A	5'-1"	A	27	27	27	27	9'-10"	C	33	33	33	33	5'-9"	A	28	28	28	28
	10	6'-9"	A	4'-10"	A	27	27	27	27	9'-5"	C	33	33	33	33	5'-6"	A	28	28	28	28
	11	6'-2"	A	4'-6"	A	27	27	27	27	8'-9"	C	33	33	33	33	5'-0"	A	28	28	28	28
	12	5'-8"	A	4'-2"	A	27	27	27	27	8'-2"	C	34	34	34	34	4'-8"	A	28	28	28	28
	13	5'-2"	A	3'-11"	A	27	27	27	27	7'-7"	C	34	34	34	34	4'-4"	A	28	28	28	28
110 MPH EXPOSURE C																					
10 LIVE	3	22'-8"	A	10'-10"	A	24	28	30	31	17'-5"	A	28	31	33	35	12'-3"	A	25	28	30	31
	3.5	19'-5"	A	9'-9"	A	24	27	29	31	16'-2"	A	29	31	33	34	11'-4"	A	26	27	29	31
	4	17'-0"	A	8'-11"	A	25	27	29	30	15'-1"	A	30	30	32	34	10'-7"	A	26	27	29	30
	4.5	15'-1"	A	8'-3"	A	25	26	28	30	14'-3"	A	30	30	32	33	9'-8"	A	27	27	28	30
	5	13'-7"	A	7'-8"	A	25	26	28	29	13'-6"	A	31	31	31	33	8'-11"	A	27	27	28	29
	5.5	12'-4"	A	7'-2"	A	26	26	27	29	12'-10"	B	31	31	31	32	8'-4"	A	27	27	27	29
	6	11'-4"	A	6'-9"	A	26	26	27	28	12'-3"	B	32	32	32	32	7'-9"	A	27	27	27	28
	6.5	10'-5"	A	6'-4"	A	26	26	27	28	11'-10"	B	32	32	32	32	7'-3"	A	27	27	27	28
	7	9'-8"	A	6'-0"	A	26	26	26	28	11'-4"	B	32	32	32	32	6'-10"	A	27	27	27	28
	7.5	9'-1"	A	5'-8"	A	26	26	26	28	10'-11"	B	33	33	33	33	6'-5"	A	27	27	27	27
	8	8'-6"	A	5'-5"	A	26	26	26	27	10'-5"	B	33	33	33	33	6'-1"	A	28	28	28	28
	8.5	8'-0"	A	5'-2"	A	27	27	27	27	9'-11"	B	33	33	33	33	5'-9"	A	28	28	28	28
	9	7'-6"	A	4'-11"	A	27	27	27	27	9'-6"	B	33	33	33	33	5'-6"	A	28	28	28	28
	9.5	7'-2"	A	4'-8"	A	27	27	27	27	9'-1"	B	33	33	33	33	5'-3"	A	28	28	28	28
	10	6'-9"	A	4'-6"	A	27	27	27	27	8'-9"	B	33	33	33	33	5'-0"	A	28	28	28	28
	11	6'-2"	A	4'-2"	A	27	27	27	27	8'-1"	B	34	34	34	34	4'-7"	A	28	28	28	28
	12	5'-8"	A	3'-10"	A	27	27	27	27	7'-6"	B	34	34	34	34	4'-3"	A	28	28	28	28
	13	5'-2"	A	3'-7"	A	27	27	27	27	7'-0"	B	34	34	34	34	3'-11"	A	28	28	28	28
105 MPH EXPOSURE C																					
20 LIVE	3	11'-10"	A	9'-4"	A	22	27	28	30	15'-9"	B	26	30	32	33	10'-1"	A	23	26	28	29
	3.5	10'-2"	A	8'-3"	A	22	26	27	29	14'-2"	C	27	29	31	32	8'-11"	A	23	25	27	28
	4	8'-11"	A	7'-5"	A	23	25	27	28	12'-10"	C	27	28	30	32	8'-1"	A	23	25	26	28
	4.5	7'-11"	A	6'-8"	A	23	25	26	28	11'-9"	C	27	28	30	31	7'-4"	A	23	24	26	27
	5	7'-1"	A	6'-1"	A	23	24	26	27	10'-10"	C	28	28	29	31	6'-9"	A	24	24	26	27
	5.5	6'-5"	A	5'-8"	A	23	24	25	27	10'-1"	C	28	28	29	30	6'-3"	A	24	24	25	27
	6	5'-11"	A	5'-3"	A	23	23	25	26	9'-5"	C	28	28	28	30	5'-9"	A	24	24	25	26
	6.5	5'-5"	A	4'-10"	A	23	23	25	26	8'-10"	C	28	28	28	29	5'-5"	A	24	24	24	26
	7	5'-1"	A	4'-6"	A	23	23	24	26	8'-4"	C	28	28	28	29	5'-1"	B	24	24	24	26
	7.5	4'-9"	A	4'-3"	A	23	23	24	26	7'-10"	C	28	28	28	29	4'-9"	B	24	24	24	25
	8	4'-5"	A	4'-0"	A	23	23	24	25	7'-5"	C	29	29	29	29	4'-6"	B	24	24	24	25
	8.5	4'-2"	A	3'-10"	A	23	23	24	25	7'-1"	C	29	29	29	29	4'-3"	B	24	24	24	25
	9	3'-11"	A	3'-7"	A	23	23	23	25	6'-9"	C	29	29	29	29	4'-1"	B	24	24	24	25
	9.5	3'-9"	A	3'-5"	A	23	23	23	25	6'-5"	C	29	29	29	29	3'-10"	B	24	24	24	24
	10	3'-6"	A	3'-3"	A	23	23	23	24	6'-2"	C	29	29	29	29	3'-8"	B	24	24	24	24
	11	3'-2"	A	3'-0"	A	23	23	23	24	5'-8"	C	29	29	29	29	3'-5"	B	24	24	24	24
	12	2'-11"	A	2'-9"	A	23	23	23	24	5'-3"	C	29	29	29	29	3'-1"	B	24	24	24	24
	13	2'-8"	A	2'-6"	A	24	24	24	24	4'-10"	C	29	29	29	29	2'-11"	B	25	25	25	25

TABLE 6.1

GROUND SNOW LOAD (PSF)	TRIB WIDTH (FT)	MAX POST SPACING ON SLAB (FT)	POST REQ'D FOR SLAB	0.042"x3"x8" Box Beam (Detail N30) MAX POST SPACING (FT)	Attached Structure MIN POST TYPE	Attached Structure FOOTER SIZE "d" (in)	Freestanding or Multispan Units MAX POST LENGTH CONSTRAINED FOOTER 8' "d" (in)	10' "d" (in)	12' "d" (in)	Double 0.042"x3"x8" Beam (Detail N25) MAX POST SPACING (FT)	Attached Structure MIN POST TYPE	Attached Structure FOOTER SIZE "d" (in)	Freestanding or Multispan Units MAX POST LENGTH CONSTRAINED FOOTER 8' "d" (in)	10' "d" (in)	12' "d" (in)	Double 0.032"x2"x6.625" Beam (Detail N25) MAX POST SPACING (FT)	Attached Structure MIN POST TYPE	Attached Structure FOOTER SIZE "d" (in)	Freestanding or Multispan Units MAX POST LENGTH CONSTRAINED FOOTER 8' "d" (in)	10' "d" (in)	12' "d" (in)
105 MPH EXPOSURE C																					
25	3	9'-7"	A	9'-0"	A	22	26	28	29	15'-3"	C	26	30	31	33	9'-8"	B	22	26	28	29
	3.5	8'-2"	A	7'-11"	A	22	26	27	29	13'-8"	C	27	29	31	32	8'-8"	B	23	25	27	28
	4	7'-2"	A	7'-1"	A	22	25	27	28	12'-5"	C	27	28	30	31	7'-9"	B	23	25	26	28
	4.5	6'-4"	A	6'-5"	B	22	24	26	28	11'-4"	C	27	28	29	31	7'-1"	B	23	24	26	27
	5	5'-9"	A	5'-11"	B	23	24	26	27	10'-6"	C	27	27	29	30	6'-6"	B	23	24	25	27
	5.5	5'-2"	A	5'-5"	B	23	24	25	27	9'-9"	C	28	28	28	30	6'-0"	B	23	23	25	26
	6	4'-9"	A	5'-0"	B	23	23	25	26	9'-1"	C	28	28	28	29	5'-7"	B	24	24	25	26
	6.5	4'-5"	A	4'-8"	B	23	23	25	26	8'-6"	C	28	28	28	29	5'-2"	B	24	24	24	26
	7	4'-1"	A	4'-4"	B	23	23	24	26	8'-0"	C	28	28	28	29	4'-10"	B	24	24	24	25
	7.5	3'-10"	A	4'-1"	B	23	23	24	25	7'-7"	C	28	28	28	28	4'-7"	B	24	24	24	25
	8	3'-7"	A	3'-10"	B	23	23	24	25	7'-2"	C	28	28	28	28	4'-4"	B	24	24	24	25
	8.5	3'-4"	A	3'-8"	B	23	23	23	25	6'-10"	C	28	28	28	28	4'-1"	B	24	24	24	25
	9	3'-2"	A	3'-5"	B	23	23	23	25	6'-6"	C	28	28	28	28	3'-11"	B	24	24	24	25
	9.5	3'-0"	A	3'-3"	B	23	23	23	24	6'-2"	C	28	28	28	28	3'-8"	B	24	24	24	24
110 MPH EXPOSURE C																					
25	3	9'-7"	A	9'-0"	A	23	27	29	30	15'-3"	C	27	30	32	34	9'-8"	B	23	26	28	30
	3.5	8'-2"	A	7'-11"	A	23	26	28	29	13'-8"	C	27	30	31	33	8'-8"	B	23	26	27	29
	4	7'-2"	A	7'-1"	A	23	26	27	29	12'-5"	C	28	29	31	32	7'-9"	B	24	25	27	28
	4.5	6'-4"	A	6'-5"	B	23	25	27	28	11'-4"	C	28	28	30	32	7'-1"	B	24	25	26	28
	5	5'-9"	A	5'-11"	B	23	25	26	28	10'-6"	C	28	28	30	31	6'-6"	B	24	24	26	27
	5.5	5'-2"	A	5'-5"	B	23	24	26	27	9'-9"	C	28	28	29	31	6'-0"	B	24	24	26	27
	6	4'-9"	A	5'-0"	B	23	24	25	27	9'-1"	C	29	29	29	30	5'-7"	B	24	24	25	27
	6.5	4'-5"	A	4'-8"	B	24	24	25	27	8'-6"	C	29	29	29	30	5'-2"	B	24	24	25	26
	7	4'-1"	A	4'-4"	B	24	24	25	26	8'-0"	C	29	29	29	29	4'-10"	B	24	24	25	26
	7.5	3'-10"	A	4'-1"	B	24	24	25	26	7'-7"	C	29	29	29	29	4'-7"	B	25	25	25	26
	8	3'-7"	A	3'-10"	B	24	24	24	26	7'-2"	C	29	29	29	29	4'-4"	B	25	25	25	26
	8.5	3'-4"	A	3'-8"	B	24	24	24	25	6'-10"	C	29	29	29	29	4'-1"	B	25	25	25	25
	9	3'-2"	A	3'-5"	B	24	24	24	25	6'-6"	C	29	29	29	29	3'-11"	B	25	25	25	25
	9.5	3'-0"	A	3'-3"	B	24	24	24	25	6'-2"	C	29	29	29	29	3'-8"	B	25	25	25	25
110 MPH EXPOSURE C																					
30	3	8'-0"	A	7'-10"	A	22	26	28	29	13'-6"	C	26	29	31	33	8'-6"	B	22	26	27	29
	3.5	6'-10"	A	6'-11"	B	22	25	27	29	12'-1"	C	26	29	30	32	7'-6"	B	22	25	27	28
	4	6'-0"	A	6'-2"	B	22	25	26	28	10'-11"	C	27	28	30	31	6'-9"	B	23	25	26	28
	4.5	5'-4"	A	5'-6"	B	22	24	26	27	9'-11"	C	27	27	29	31	6'-2"	B	23	24	26	27
	5	4'-10"	A	5'-1"	B	22	24	25	27	9'-2"	C	27	27	29	30	5'-7"	B	23	24	25	27
	5.5	4'-4"	A	4'-8"	B	22	23	25	27	8'-6"	C	27	27	28	30	5'-2"	B	23	23	25	26
	6	4'-0"	A	4'-3"	B	22	23	25	26	7'-10"	C	27	27	28	29	4'-9"	B	23	23	25	26
	6.5	3'-8"	A	4'-0"	B	22	23	24	26	7'-4"	C	27	27	27	29	4'-6"	B	23	23	24	26
	7	3'-5"	A	3'-8"	B	22	22	24	26	6'-11"	C	27	27	27	29	4'-2"	B	23	23	24	25
	7.5	3'-2"	A	3'-6"	B	22	22	24	25	6'-6"	C	28	28	28	28	3'-11"	B	23	23	24	25
	8	3'-0"	A	3'-3"	B	22	22	24	25	6'-2"	C	28	28	28	28	3'-8"	B	23	23	23	25
	8.5	2'-10"	A	3'-1"	B	22	22	23	25	5'-10"	C	28	28	28	28	3'-6"	B	23	23	23	25
	9	2'-8"	A	2'-11"	B	22	22	23	25	5'-7"	C	28	28	28	28	3'-4"	B	23	23	23	24
105 MPH EXPOSURE C																					
30	3	8'-0"	A	7'-10"	A	21	26	27	29	13'-6"	C	25	29	31	32						
	3.5	6'-10"	A	6'-11"	B	21	25	26	28	12'-1"	C	25	28	30	31						
	4	6'-0"	A	6'-2"	B	21	24	26	27	10'-11"	C	26	27	29	31						
	4.5	5'-4"	A	5'-6"	B	21	24	25	27	9'-11"	C	26	27	29	30						
	5	4'-10"	A	5'-1"	B	21	23	25	26	9'-2"	C	26	26	28	30						
	5.5	4'-4"	A	4'-8"	B	22	23	24	26	8'-6"	C	26	26	28	29						
	6	4'-0"	A	4'-3"	B	22	23	24	26	7'-10"	C	26	26	27	29						
	6.5	3'-8"	A	4'-0"	B	22	22	24	25	7'-4"	C	27	27	27	28						
	7	3'-5"	A	3'-8"	B	22	22	24	25	6'-11"	C	27	27	27	28						
	7.5	3'-2"	A	3'-6"	B	22	22	23	25	6'-6"	C	27	27	27	28						
	8	3'-0"	A	3'-3"	B	22	22	23	24	6'-2"	C	27	27	27	27						
	8.5	2'-10"	A	3'-1"	B	22	22	23	24	5'-10"	C	27	27	27	27						
	9	2'-8"	A	2'-11"	B	22	22	23	24	5'-7"	C	27	27	27	27						

4/27/2009

SOLID COVER 6.0 POST SPACINGS FOR PATIO AND COMMERCIAL COVERS HIGH WIND AREAS

TABLE 6.1

GROUND SNOW LOAD (PSF)	TRIB WIDTH (FT)	MAX POST SPACING ON SLAB (FT)	POST REQ'D FOR SLAB	0.042"x3"x8" Box Beam (Detail N30) MAX POST SPACING (FT)	MIN POST TYPE	FOOTER SIZE "d" (in)	Attached Structure MAX POST LENGTH 8' CONSTRAINED FOOTER "d" (in)	10' "d" (in)	12' "d" (in)	Freestanding or Multispan Units MAX POST LENGTH 8' CONSTRAINED FOOTER "d" (in)	10' "d" (in)	12' "d" (in)	Double 0.042"x3"x8" Beam (Detail N25) MAX POST SPACING (FT)	MIN POST TYPE	FOOTER SIZE "d" (in)	Attached Structure MAX POST LENGTH 8' CONSTRAINED FOOTER "d" (in)	10' "d" (in)	12' "d" (in)	Freestanding or Multispan Units MAX POST LENGTH 8' CONSTRAINED FOOTER "d" (in)	10' "d" (in)	12' "d" (in)	Double 0.032"x2"x6.625" Beam (Detail N25) MAX POST SPACING (FT)	MIN POST TYPE	FOOTER SIZE "d" (in)	Attached Structure MAX POST LENGTH 8' CONSTRAINED FOOTER "d" (in)	10' "d" (in)	12' "d" (in)	Freestanding or Multispan Units MAX POST LENGTH 8' CONSTRAINED FOOTER "d" (in)	10' "d" (in)	12' "d" (in)
110 MPH EXPOSURE C																														
20 LIVE	3	11'-10"	A	9'-4"	A	23	27	29	30	15'-9"	B	27	30	32	34	10'-1"	A	23	27	28	30									
	3.5	10'-2"	A	8'-3"	A	23	26	28	30	14'-2"	C	28	30	32	33	8'-11"	A	24	26	28	29									
	4	8'-11"	A	7'-5"	A	23	26	27	29	12'-10"	C	28	29	31	32	8'-1"	A	24	25	27	29									
	4.5	7'-11"	A	6'-8"	A	23	25	27	28	11'-9"	C	28	29	30	32	7'-4"	A	24	25	27	28									
	5	7'-1"	A	6'-1"	A	24	25	26	28	10'-10"	C	29	29	30	31	6'-9"	A	24	25	26	28									
	5.5	6'-5"	A	5'-8"	A	24	24	26	27	10'-1"	C	29	29	29	31	6'-3"	A	25	25	26	27									
	6	5'-11"	A	5'-3"	A	24	24	26	27	9'-5"	C	29	29	29	30	5'-9"	A	25	25	25	27									
	6.5	5'-5"	A	4'-10"	A	24	24	25	27	8'-10"	C	29	29	29	30	5'-5"	A	25	25	25	27									
	7	5'-1"	A	4'-6"	A	24	24	25	26	8'-4"	C	29	29	29	30	5'-1"	B	25	25	25	26									
	7.5	4'-9"	A	4'-3"	A	24	24	25	26	7'-10"	C	29	29	29	29	4'-9"	B	25	25	25	26									
	8	4'-5"	A	4'-0"	A	24	24	24	26	7'-5"	C	29	29	29	29	4'-6"	B	25	25	25	26									
	8.5	4'-2"	A	3'-10"	A	24	24	24	26	7'-1"	C	30	30	30	30	4'-3"	B	25	25	25	25									
	9	3'-11"	A	3'-7"	A	24	24	24	25	6'-9"	C	30	30	30	30	4'-1"	B	25	25	25	25									
	9.5	3'-9"	A	3'-5"	A	24	24	24	25	6'-5"	C	30	30	30	30	3'-10"	B	25	25	25	25									
	10	3'-6"	A	3'-3"	A	24	24	24	25	6'-2"	C	30	30	30	30	3'-8"	B	25	25	25	25									
	11	3'-2"	A	3'-0"	A	24	24	24	25	5'-8"	C	30	30	30	30	3'-5"	B	25	25	25	25									
120 MPH EXPOSURE C																														
20 LIVE	3	11'-10"	A	9'-4"	A	24	28	30	32	15'-9"	B	29	32	34	36	10'-1"	A	25	28	30	31									
	3.5	10'-2"	A	8'-3"	A	25	28	29	31	14'-2"	C	29	31	33	35	8'-11"	A	25	27	29	30									
	4	8'-11"	A	7'-5"	A	25	27	29	30	12'-10"	C	30	30	32	34	8'-1"	A	25	27	28	30									
	4.5	7'-11"	A	6'-8"	A	25	26	28	30	11'-9"	C	30	30	32	33	7'-4"	A	26	26	28	29									
	5	7'-1"	A	6'-1"	A	25	26	28	29	10'-10"	C	30	30	31	33	6'-9"	A	26	26	27	29									
	5.5	6'-5"	A	5'-8"	A	25	25	27	29	10'-1"	C	31	31	31	32	6'-3"	A	26	26	27	28									
	6	5'-11"	A	5'-3"	A	25	25	27	28	9'-5"	C	31	31	31	32	5'-9"	A	26	26	27	28									
	6.5	5'-5"	A	4'-10"	A	25	25	26	28	8'-10"	C	31	31	31	31	5'-5"	A	26	26	26	28									
	7	5'-1"	A	4'-6"	A	25	25	26	28	8'-4"	C	31	31	31	31	5'-1"	B	26	26	26	27									
	7.5	4'-9"	A	4'-3"	A	25	25	26	27	7'-10"	C	31	31	31	31	4'-9"	B	26	26	26	27									
	8	4'-5"	A	4'-0"	A	25	25	26	27	7'-5"	C	31	31	31	31	4'-6"	B	26	26	26	27									
	8.5	4'-2"	A	3'-10"	A	26	26	26	27	7'-1"	C	31	31	31	31	4'-3"	B	27	27	27	27									
	9	3'-11"	A	3'-7"	A	26	26	26	27	6'-9"	C	31	31	31	31	4'-1"	B	27	27	27	27									
	9.5	3'-9"	A	3'-5"	A	26	26	26	26	6'-5"	C	32	32	32	32	3'-10"	B	27	27	27	27									
130 MPH EXPOSURE C																														
20 LIVE	3	11'-10"	A	8'-8"	A	25	29	31	32	14'-8"	B	30	33	35	36	10'-1"	A	26	29	31	32									
	3.5	10'-2"	A	7'-9"	A	25	28	30	32	13'-7"	B	31	32	34	36	8'-11"	A	27	28	30	32									
	4	8'-11"	A	7'-0"	A	26	28	30	31	12'-8"	C	31	32	34	35	8'-1"	A	27	28	29	31									
	4.5	7'-11"	A	6'-5"	A	26	27	29	31	11'-9"	C	32	32	33	35	7'-4"	A	27	27	29	31									
	5	7'-1"	A	5'-11"	A	26	27	29	30	10'-10"	C	32	32	32	34	6'-9"	A	27	27	28	30									
	5.5	6'-5"	A	5'-6"	A	26	26	28	30	10'-1"	C	32	32	32	34	6'-3"	A	27	27	28	30									
	6	5'-11"	A	5'-2"	A	27	27	28	29	9'-5"	C	32	32	32	33	5'-9"	A	28	28	28	29									
	6.5	5'-5"	A	4'-10"	A	27	27	27	29	8'-10"	C	33	33	33	33	5'-5"	A	28	28	28	29									
	7	5'-1"	A	4'-6"	A	27	27	27	29	8'-4"	C	33	33	33	33	5'-1"	B	28	28	28	29									
	7.5	4'-9"	A	4'-3"	A	27	27	27	28	7'-10"	C	33	33	33	33	4'-9"	B	28	28	28	28									
	8	4'-5"	A	4'-0"	A	27	27	27	28	7'-5"	C	33	33	33	33	4'-6"	B	28	28	28	28									
	8.5	4'-2"	A	3'-10"	A	27	27	27	28	7'-1"	C	33	33	33	33	4'-3"	B	28	28	28	28									
	9	3'-11"	A	3'-7"	A	27	27	27	28	6'-9"	C	33	33	33	33	4'-0"	B	28	28	28	28									
	9.5	3'-9"	A	3'-5"	A	27	27	27	27	6'-5"	C	33	33	33	33	3'-10"	B	28	28	28	28									
	10	3'-6"	A	3'-3"	A	27	27	27	27	6'-2"	C	33	33	33	33	3'-8"	B	28	28	28	28									

TABLE 6.1

GROUND SNOW LOAD (PSF)	TRIB WIDTH (FT)	MAX POST SPACING ON SLAB (FT)	POST REQ'D FOR SLAB	0.042"x3"x8" Box Beam (Detail N30) MAX POST SPACING (FT)	MIN POST TYPE	FOOTER SIZE "d" (in)	Attached Structure MAX POST LENGTH 8' CONSTRAINED FOOTER "d" (in)	10' "d" (in)	12' "d" (in)	Freestanding or Multispan Units MAX POST LENGTH 8' CONSTRAINED FOOTER "d" (in)	10' "d" (in)	12' "d" (in)	Double 0.042"x3"x8" Beam (Detail N25) MAX POST SPACING (FT)	MIN POST TYPE	FOOTER SIZE "d" (in)	Attached Structure MAX POST LENGTH 8' CONSTRAINED FOOTER "d" (in)	10' "d" (in)	12' "d" (in)	Freestanding or Multispan Units MAX POST LENGTH 8' CONSTRAINED FOOTER "d" (in)	10' "d" (in)	12' "d" (in)	Double 0.032"x2"x6.625" Beam (Detail N25) MAX POST SPACING (FT)	MIN POST TYPE	FOOTER SIZE "d" (in)	Attached Structure MAX POST LENGTH 8' CONSTRAINED FOOTER "d" (in)	10' "d" (in)	12' "d" (in)	Freestanding or Multispan Units MAX POST LENGTH 8' CONSTRAINED FOOTER "d" (in)	10' "d" (in)	12' "d" (in)
110 MPH EXPOSURE C																														
40	3	6'-1"	A	6'-2"	B	20	25	27	28	11'-0"	C	24	28	30	31	6'-10"	B	21	25	26	28									
	3.5	5'-2"	A	5'-5"	B	20	24	26	27	9'-9"	C	24	27	29	31	6'-0"	B	21	24	26	27									
	4	4'-6"	A	4'-10"	B	20	24	25	27	8'-9"	C	25	27	28	30	5'-4"	B	21	23	25	26									
	4.5	4'-0"	A	4'-4"	B	20	23	25	26	7'-11"	C	25	26	28	29	4'-10"	B	21	23	25	26									
	5	3'-7"	A	3'-11"	B	20	23	24	26	7'-3"	C	25	26	27	29	4'-5"	B	21	23	24	26									
	5.5	3'-3"	A	3'-7"	B	20	22	24	25	6'-9"	C	25	25	27	28	4'-1"	B	21	22	24	25									
	6	3'-0"	A	3'-4"	B	20	22	24	25	6'-3"	C	25	25	27	28	3'-9"	B	21	22	24	25									
	6.5	2'-9"	A	3'-1"	B	20	22	23	25	5'-10"	C	25	25	26	28	3'-6"	B	21	22	23	25									
	7	2'-7"	A	2'-10"	B	21	21	23	24	5'-5"	C	25	25	26	27	3'-3"	B	21	21	23	24									
	7.5	2'-5"	A	2'-8"	B	21	21	23	24	5'-1"	C	25	25	26	27	3'-1"	B	21	21	23	24									
	8	2'-3"	A	2'-6"	B	21	21	23	24	4'-10"	C	26	26	26	27	2'-10"	B	21	21	23	24									
	8.5	2'-1"	A	2'-4"	B	21	21	22	24	4'-7"	C	26	26	26	26	2'-8"	B	22	22	22	24									
110 MPH EXPOSURE C																														
60	3	4'-1"	A	4'-4"	B	18	23	25	26	8'-0"	C	22	26	28	29	4'-11"	B	18	23	25	26									
	3.5	3'-6"	A	3'-9"	B	18	23	24	26	7'-1"	C	22	26	27	29	4'-3"	B	19	22	24	25									
	4	3'-0"	A	3'-4"	B	18	22	24	25	6'-3"	C	22	25	27	28	3'-9"	B	19	22	24	25									
	4.5	2'-8"	A	3'-0"	B	18	22	23	25	5'-8"	C	22	24	26	28	3'-5"	B	19	22	23	25									
	5	2'-5"	A	2'-8"	B	18	21	23	24	5'-2"	C	22	24	26	27	3'-1"	B	19	21	23	24									
	5.5	2'-2"	A	2'-6"	B	18	21	23	24	4'-9"	C	22	24	25	27	2'-10"	B	19	21	22	24									
	6	2'-0"	A	2'-3"	B	18	21	22	24	4'-5"	C	22	23	25	26	2'-7"	B	19	21	22	24									
	6.5	1'-10"	A	2'-1"	B	18	20	22	23	4'-1"	C	23	23	24	26	2'-5"	B	19	20	22	23									
	7	1'-9"	A	1'-11"	B	18	20	22	23	3'-10"	C	23	23	24	26	2'-3"	B	19	20	22	23									

TABLE 6.2 TRIBUTARY WIDTHS FOR SINGLE SPAN ATTACHED STRUCTURES

OVER-HANG (FT)	PROJECTION OF SINGLE SPAN STUCTURES (FT) 8'	9'	10'	11'	12'	13'	14'	15'	16'	17'	18'	19'	20'	21'	22'
0'	4'	4.5'	5'	5.5'	6'	6.5'	7'	7.5'	8'	8.5'	9'	9.5'	10'	10.5'	11'
1'	4.5'	5'	5.5'	6'	6.5'	7'	7.5'	8'	8.5'	9'	9.5'	10'	10.5'	11'	11.5'
2'	5'	5.5'	6'	6.5'	7'	7.5'	8'	8.5'	9'	9.5'	10'	10.5'	11'	11.5'	12'
3'	5.5'	6'	6.5'	7'	7.5'	8'	8.5'	9'	9.5'	10'	10.5'	11'	11.5'	12'	12.5'
4'	6'	6.5'	7'	7.5'	8'	8.5'	9'	9.5'	10'	10.5'	11'	11.5'	12'	12.5'	13'
5'	6.5'	7'	7.5'	8'	8.5'	9'	9.5'	10'	10.5'	11'	11.5'	12'	12.5'	13'	13.5'

TABLE 6.3 Post Requirements for Attached Structures

Post Description	Max Hgt	POST
Twin 0.062"x1.5"x1.5" ScrolL	9'	A
0.042"x3"x8" Aluminum Post	11'	B
0.024"Post with Sideplates	12'	B
Clover 0.032"x3"x3" Alum	12'	B
Clover 0.040"x3"x3" Alum	12'	B
Colonial 0.062" Extruded	12'	C
0.041"x3"x3" Steel Clover	12'	D
0.041"x3"x3" Steel Clover	8'	E
3/16"x3"x3" Steel Square	15'	F
3/16"x4"x4" Steel Square	18'	G
5/16"x4"x4" Steel Square	18'	H

TABLE 6.4 Post Requirements for Freestanding Structures

Post Description	Maximum Footing	Max Height	POST
0.041"x3"x3" Steel Clover	d = 23"	12'	D
0.041"x3"x3" Steel Clover	d = 23"	8'	E
3/16"x3"x3" Steel Square	d = 32"	15'	F
3/16"x4"x4" Steel Square	d = 38"	18'	G
5/16"x4"x4" Steel Square	d = 42"	18'	H

GENERAL INSTRUCTIONS FOR THESE TABLES

1. CHOOSE FREESTANDING OR ATTACHED STRUCTURE
2. CHOOSE PROJECTION, WIDTH AND OVERHANG OF UNIT
3. DETERMINE WIND AND LIVE OR SNOW LOAD OF STRUCTURE SITE (PATIO UNITS USE 10 PSF MIN, COMMERCIAL UNITS USE 20PSF MIN)
4. CHOOSE A PANEL FROM **TABLES 4.1** TO **4.8** THAT HAS ADEQUATE CLEARSPAN FOR YOUR NEEDS.
5. DETERMINE TRIBUTARY WIDTH FROM TABLE 6.2 OR CALCULATE FROM TRIBUTARY DIAGRAM ON**SC02 PAGE 2 OF 2**
6. CHOOSE A HEADER FROM TABLE 6.1 THAT HAS ADEQUATE POST SPACING.
7. USE THE APPROPRIATE FOOTER SIZE SHOWN.
8. FOR SINGLE SPAN ATTACHED UNIT USE THE POST SHOWN UPGRADE THE POST IF THE HEIGHT IS NOT SUFFICIENT FREESTANDING AND MULTISPAN UNITS USE TABLE 6.4
9. FIND THE O/C SPACING OR # OF FASTENERS FOR ATTACHING TO WALL FROM TABLE 7.5
10. USE THE APPROPRIATE DETAILS

FOR PATIO SLABS FOLLOW 1-6 FROM ABOVE THEN

SLAB 7. DETERMINE MAXIMUM POST SPACING ON SLAB FROM TABLE 6.1
SLAB 8. USE THE SMALLER OF THE POST SPACING ON SLAB OR HEADER POST SPACING
SLAB 9. FOLLOW **9-11** FROM ABOVE
SLAB 10. FOR **TWO** POST STRUCTURES USE **TABLE 7.1** ON SHEET **M3** FOR SLAB REQUIREMENTS INSTEAD OF THESE TABLES
SLAB11. CHECK TABLES **SLAB1** AND **SLAB2** ON **M5** FOR CORNER DISTANCE REQUIRMENTS.

Amerimax Building Products
5208 Tennyson Parkway
Plano, Texas 75024

Carl Putnam, P. E.
3441 Ivylink Place
Lynchburg, VA 24503
carlputnam@comcast.net

REGISTERED PROFESSIONAL ENGINEER
CARL PUTNAM
C 68139
EXP. 6/30/2009
CIVIL
STATE OF CALIFORNIA

4/27/2009

SOLID COVER 6.0 POST SPACINGS FOR PATIO AND COMMERCIAL COVERS HIGH WIND AREAS

TABLE 6.5

GROUND SNOW LOAD (PSF)	TRIB WIDTH (FT)	MAX POST SPACING ON SLAB (FT)	POST REQ'D FOR SLAB	12 Ga 3"x8" Steel C Beam (Detail T) MAX POST SPACING (FT)	Attached Structure MIN POST TYPE	Attached Structure FOOTER SIZE "d" (in)	Freestanding or Multispan Units MAX POST LENGTH 8' CONSTRAINED FOOTER "d" (in)	12' CONSTRAINED FOOTER "d" (in)	18' CONSTRAINED FOOTER "d" (in)	16 Ga 3"x8" Steel C Beam (Detail T) MAX POST SPACING (FT)	Attached Structure MIN POST TYPE	Attached Structure FOOTER SIZE "d" (in)	Freestanding or Multispan Units MAX POST LENGTH 8' CONSTRAINED FOOTER "d" (in)	12' CONSTRAINED FOOTER "d" (in)	18' CONSTRAINED FOOTER "d" (in)	Double 12 Ga 3"x8" Steel C Beam (T and AY) MAX POST SPACING (FT)	Attached Structure MIN POST TYPE	Attached Structure FOOTER SIZE "d" (in)	Freestanding or Multispan Units MAX POST LENGTH 8' CONSTRAINED FOOTER "d" (in)	12' CONSTRAINED FOOTER "d" (in)	18' CONSTRAINED FOOTER "d" (in)
105 MPH EXPOSURE C																					
10 LIVE	3	22'-8"	A	27'-8"	B	32	34	38	NA	22'-9"	B	30	32	36	NA	30'-0"	B	33	35	38	NA
	3.5	19'-5"	A	26'-4"	C	33	34	37	NA	21'-8"	B	31	32	36	NA	30'-0"	C	34	35	38	NA
	4	17'-0"	A	25'-3"	C	34	34	37	NA	20'-9"	B	32	32	35	NA	30'-0"	C	36	36	38	NA
	4.5	15'-1"	A	24'-3"	C	35	35	37	NA	19-11"	B	33	33	35	NA	30'-0"	C	37	37	38	NA
	5	13'-7"	A	23'-6"	C	36	36	36	NA	19'-3"	C	33	33	35	NA	29'-3"	C	38	38	38	NA
	5.5	12'-4"	A	22'-9"	C	37	37	37	NA	18'-1"	C	34	34	34	NA	28'-5"	C	39	39	39	NA
	6	11'-4"	A	22'-2"	C	37	37	37	NA	17'-0"	C	34	34	34	NA	27'-8"	D	40	40	40	NA
	6.5	10'-5"	A	21'-7"	C	38	38	38	NA	16'-0"	C	34	34	34	NA	26'-11"	D	41	41	41	NA
	7	9'-8"	A	21'-1"	C	39	39	39	NA	15'-2"	C	35	35	35	NA	26'-4"	D	42	42	42	NA
	7.5	9'-1"	A	20'-7"	C	39	39	39	NA	14'-5"	C	35	35	35	NA	25'-9"	D	42	42	42	NA
	8	8'-6"	A	20'-2"	C	40	40	40	NA	13'-9"	C	35	35	35	NA	25'-3"	D	43	43	43	NA
	8.5	8'-0"	A	19'-9"	D	40	40	40	NA	13'-2"	C	35	35	35	NA	24'-9"	D	43	43	43	NA
	9	7'-6"	A	19'-5"	D	41	41	41	NA	12'-7"	C	35	35	35	NA	24'-3"	D	44	44	44	NA
	9.5	7'-2"	A	19'-1"	D	41	41	41	NA	12'-1"	C	36	36	36	NA	23'-10"	D	44	44	44	NA
	10	6'-9"	A	18'-9"	D	42	42	42	NA	11'-8"	C	36	36	36	NA	23'-6"	D	45	45	45	NA
	11	6'-2"	A	18'-2"	D	43	43	43	NA	10'-10"	C	36	36	36	NA	22'-9"	D	46	46	46	NA
	12	5'-8"	A	17'-8"	D	43	43	43	NA	10'-0"	C	36	36	36	NA	22'-2"	D	47	47	47	NA
	13	5'-2"	A	17'-2"	D	44	44	44	NA	9'-3"	C	36	36	36	NA	21'-7"	D	48	48	48	NA
110 MPH EXPOSURE C																					
10 LIVE	3	22'-8"	A	26'-10"	B	33	35	38	NA	22'-1"	A	30	33	37	NA	30'-0"	B	34	35	39	NA
	3.5	19'-5"	A	25'-7"	B	34	34	38	NA	21'-0"	B	32	33	36	NA	30'-0"	C	36	36	39	NA
	4	17'-0"	A	24'-6"	C	35	35	38	NA	20'-1"	B	33	33	36	NA	30'-0"	C	37	37	39	NA
	4.5	15'-1"	A	23'-7"	C	36	36	37	NA	19'-4"	B	33	33	36	NA	29'-5"	C	38	38	39	NA
	5	13'-7"	A	22'-10"	C	37	37	37	NA	18'-8"	C	34	34	35	NA	28'-6"	C	39	39	39	NA
	5.5	12'-4"	A	22'-1"	C	37	37	37	NA	18'-1"	C	35	35	35	NA	27'-7"	C	40	40	40	NA
	6	11'-4"	A	21'-6"	C	38	38	38	NA	17'-0"	C	35	35	35	NA	26'-10"	C	41	41	41	NA
	6.5	10'-5"	A	20'-11"	C	39	39	39	NA	16'-0"	C	35	35	35	NA	26'-2"	D	42	42	42	NA
	7	9'-8"	A	20'-5"	C	39	39	39	NA	15'-2"	C	36	36	36	NA	25'-7"	D	42	42	42	NA
	7.5	9'-1"	A	20'-0"	C	40	40	40	NA	14'-5"	C	36	36	36	NA	25'-0"	D	43	43	43	NA
	8	8'-6"	A	19'-7"	C	41	41	41	NA	13'-9"	C	36	36	36	NA	24'-6"	D	44	44	44	NA
	8.5	8'-0"	A	19'-2"	D	41	41	41	NA	13'-2"	C	36	36	36	NA	24'-0"	D	44	44	44	NA
	9	7'-6"	A	18'-10"	D	42	42	42	NA	12'-7"	C	36	36	36	NA	23'-7"	D	45	45	45	NA
	9.5	7'-2"	A	18'-6"	D	42	42	42	NA	12'-1"	C	37	37	37	NA	23'-2"	D	45	45	45	NA
	10	6'-9"	A	18'-2"	D	43	43	43	NA	11'-8"	C	37	37	37	NA	22'-10"	D	46	46	46	NA
	11	6'-2"	A	17'-8"	D	44	44	44	NA	10'-10"	C	37	37	37	NA	22'-1"	D	47	47	47	NA
	12	5'-8"	A	17'-2"	D	44	44	44	NA	10'-0"	C	37	37	37	NA	21'-6"	D	48	48	48	NA
	13	5'-2"	A	16'-8"	D	45	45	45	NA	9'-3"	C	37	37	37	NA	20'-11"	D	49	49	49	NA
105 MPH EXPOSURE C																					
20 LIVE	3	11'-10"	A	26'-10"	C	32	34	37	42	17'-8"	C	27	31	34	38	30'-0"	D	33	35	38	43
	3.5	10'-2"	A	25'-6"	D	33	33	37	42	15'-10"	C	28	30	33	38	30'-0"	D	34	35	38	43
	4	8'-11"	A	24'-5"	D	34	34	37	41	14'-4"	C	28	29	33	37	30'-0"	D	36	36	38	43
	4.5	7'-11"	A	23'-5"	D	34	34	36	41	13'-2"	C	28	29	32	36	29'-7"	D	37	37	38	43
	5	7'-1"	A	22'-2"	D	35	35	36	40	12'-2"	C	29	29	31	36	28'-6"	D	38	38	38	43
	5.5	6'-5"	A	20'-11"	D	35	35	35	40	11'-3"	C	29	29	31	35	27'-8"	D	39	39	39	42
	6	5'-11"	A	19'-9"	D	36	36	36	39	10'-7"	C	29	29	30	35	26'-10"	D	40	40	40	42
	6.5	5'-5"	A	18'-9"	D	36	36	36	39	9'-9"	C	29	29	30	34	26'-2"	D	40	40	40	42
	7	5'-1"	A	17'-10"	D	36	36	36	39	9'-1"	C	29	29	29	34	25'-6"	E	41	41	41	42
	7.5	4'-9"	A	17'-1"	D	37	37	37	38	8'-6"	C	29	29	29	33	24'-11"	E	42	42	42	42
	8	4'-5"	A	16'-4"	D	37	37	37	38	7'-11"	C	29	29	29	33	24'-5"	E	42	42	42	42
	8.5	4'-2"	A	15'-8"	D	37	37	37	38	7'-6"	C	29	29	29	33	23'-11"	E	43	43	43	43
	9	3'-11"	A	15'-1"	D	38	38	38	38	7'-1"	C	29	29	29	32	23'-5"	E	43	43	43	43
	9.5	3'-9"	A	14'-6"	D	38	38	38	38	6'-8"	C	29	29	29	32	23'-0"	E	44	44	44	44
	10	3'-6"	A	14'-0"	D	38	38	38	38	6'-4"	C	29	29	29	32	22'-6"	E	44	44	44	44
	11	3'-2"	A	13'-2"	D	38	38	38	38	5'-10"	C	29	29	29	31	20'-7"	E	44	44	44	44
	12	2'-11"	A	12'-4"	D	39	39	39	39	5'-4"	C	29	29	29	31	18'-11"	E	45	45	45	45
	13	2'-8"	A	11'-8"	D	39	39	39	39	4'-11"	C	29	29	29	31	17'-6"	E	45	45	45	45

TABLE 6.5

GROUND SNOW LOAD (PSF)	TRIB WIDTH (FT)	MAX POST SPACING ON SLAB (FT)	POST REQ'D FOR SLAB	12 Ga 3"x8" Steel C Beam (Detail T) MAX POST SPACING (FT)	Attached Structure MIN POST TYPE	Attached Structure FOOTER SIZE "d" (in)	Freestanding or Multispan Units MAX POST LENGTH 8' CONSTRAINED FOOTER "d" (in)	12' CONSTRAINED FOOTER "d" (in)	18' CONSTRAINED FOOTER "d" (in)	16 Ga 3"x8" Steel C Beam (Detail T) MAX POST SPACING (FT)	Attached Structure MIN POST TYPE	Attached Structure FOOTER SIZE "d" (in)	Freestanding or Multispan Units MAX POST LENGTH 8' CONSTRAINED FOOTER "d" (in)	12' CONSTRAINED FOOTER "d" (in)	18' CONSTRAINED FOOTER "d" (in)	Double 12 Ga 3"x8" Steel C Beam (T and A\ MAX POST SPACING (FT)	Attached Structure MIN POST TYPE	Attached Structure FOOTER SIZE "d" (in)	Freestanding or Multispan Units MAX POST LENGTH 8' CONSTRAINED FOOTER "d" (in)	12' CONSTRAINED FOOTER "d" (in)	18' CONSTRAINED FOOTER "d" (in)
105 MPH EXPOSURE C																					
25	3	9'-7"	A	26'-5"	D	31	34	37	42	17'-1"	C	27	30	34	38	30'-0"	D	33	35	38	43
	3.5	8'-2"	A	25'-1"	D	32	33	37	41	15'-4"	C	28	30	33	37	30'-0"	D	34	35	38	43
	4	7'-2"	A	24'-0"	D	33	33	36	41	13'-10"	C	28	29	32	37	30'-0"	D	36	36	38	43
	4.5	6'-4"	A	23'-0"	D	34	34	36	41	12'-8"	C	28	28	32	36	29'-1"	D	37	37	38	43
	5	5'-9"	A	21'-7"	D	35	35	36	40	11'-9"	C	28	28	31	35	28'-1"	E	38	38	38	42
	5.5	5'-2"	A	20'-3"	D	35	35	35	40	10'-11"	C	29	29	31	35	27'-2"	E	39	39	39	42
	6	4'-9"	A	19'-2"	D	35	35	35	39	10'-1"	C	29	29	30	34	26'-5"	E	39	39	39	42
	6.5	4'-5"	A	18'-2"	D	36	36	36	39	9'-4"	C	29	29	30	34	25'-9"	E	40	40	40	42
	7	4'-1"	A	17'-4"	D	36	36	36	38	8'-8"	C	29	29	29	34	25'-1"	E	41	41	41	41
	7.5	3'-10"	A	16'-7"	D	36	36	36	38	8'-1"	C	29	29	29	33	24'-6"	E	41	41	41	41
	8	3'-7"	A	15'-10"	D	37	37	37	38	7'-7"	C	29	29	29	33	24'-0"	E	42	42	42	42
	8.5	3'-4"	A	15'-2"	D	37	37	37	37	7'-2"	C	29	29	29	32	23'-6"	E	43	43	43	43
	9	3'-2"	A	14'-7"	D	37	37	37	37	6'-9"	C	29	29	29	32	23'-1"	E	43	43	43	43
	9.5	3'-0"	A	14'-1"	D	37	37	37	37	6'-5"	C	29	29	29	32	22'-7"	E	44	44	44	44
110 MPH EXPOSURE C																					
25	3	9'-7"	A	26'-5"	D	32	34	38	43	17'-1"	C	28	31	35	39	30'-0"	D	34	35	39	44
	3.5	8'-2"	A	25'-1"	D	33	34	38	42	15'-4"	C	28	30	34	38	30'-0"	D	36	36	39	44
	4	7'-2"	A	24'-0"	D	34	34	37	42	13'-10"	C	29	30	33	37	30'-0"	D	37	37	39	44
	4.5	6'-4"	A	23'-0"	D	35	35	37	42	12'-8"	C	29	29	32	37	29'-1"	D	38	38	39	44
	5	5'-9"	A	21'-7"	D	36	36	36	41	11'-9"	C	29	29	32	36	28'-1"	E	39	39	39	43
	5.5	5'-2"	A	20'-3"	D	36	36	36	40	10'-11"	C	29	29	31	36	27'-2"	E	40	40	40	43
	6	4'-9"	A	19'-2"	D	37	37	37	40	10'-1"	C	30	30	31	35	26'-5"	E	41	41	41	43
	6.5	4'-5"	A	18'-2"	D	37	37	37	40	9'-4"	C	30	30	30	35	25'-9"	E	41	41	41	43
	7	4'-1"	A	17'-4"	D	37	37	37	39	8'-8"	C	30	30	30	34	25'-1"	E	42	42	42	42
	7.5	3'-10"	A	16'-7"	D	38	38	38	39	8'-1"	C	30	30	30	34	24'-6"	E	43	43	43	43
	8	3'-7"	A	15'-10"	D	38	38	38	38	7'-7"	C	30	30	30	34	24'-0"	E	43	43	43	43
	8.5	3'-4"	A	15'-2"	D	38	38	38	38	7'-2"	C	30	30	30	33	23'-6"	E	44	44	44	44
	9	3'-2"	A	14'-7"	D	38	38	38	38	6'-9"	C	30	30	30	33	23'-1"	E	45	45	45	45
	9.5	3'-0"	A	14'-1"	D	39	39	39	39	6'-5"	C	30	30	30	33	22'-7"	E	45	45	45	45
110 MPH EXPOSURE C																					
30	3	8'-0"	A	24'-10"	D	32	34	38	42	15'-1"	C	27	30	34	38	30'-0"	D	34	35	39	44
	3.5	6'-10"	A	23'-7"	D	33	33	37	42	13'-6"	C	27	29	33	37	29'-9"	D	35	35	39	44
	4	6'-0"	A	22'-3"	D	34	34	37	41	12'-2"	C	28	29	32	37	28'-5"	D	37	37	39	44
	4.5	5'-4"	A	20'-8"	D	34	34	36	41	11'-1"	C	28	28	32	36	27'-4"	E	37	37	38	43
	5	4'-10"	A	19'-4"	D	35	35	36	40	10'-2"	C	28	28	31	35	26'-5"	E	38	38	38	43
	5.5	4'-4"	A	18'-2"	D	35	35	35	40	9'-3"	C	28	28	30	35	25'-7"	E	39	39	39	43
	6	4'-0"	A	17'-1"	D	35	35	35	39	8'-6"	C	28	28	30	34	24'-10"	E	40	40	40	42
	6.5	3'-8"	A	16'-3"	D	36	36	36	39	7'-10"	C	28	28	29	34	24'-2"	E	41	41	41	42
	7	3'-5"	A	15'-5"	D	36	36	36	38	7'-4"	C	28	28	29	33	23'-7"	E	41	41	41	42
	7.5	3'-2"	A	14'-9"	D	36	36	36	38	6'-10"	C	28	28	29	33	23'-1"	E	42	42	42	42
	8	3'-0"	A	14'-1"	D	36	36	36	38	6'-5"	C	28	28	28	33	22'-7"	E	43	43	43	43
	8.5	2'-10"	A	13'-6"	D	37	37	37	37	6'-0"	C	28	28	28	32	21'-4"	E	43	43	43	43
	9	2'-8"	A	12'-11"	E	37	37	37	37	5'-8"	C	28	28	28	32	20'-2"	E	43	43	43	43
105 MPH EXPOSURE C																					
30	3	8'-0"	A	24'-10"	D	31	33	37	41	15'-1"	C	26	29	33	37						
	3.5	6'-10"	A	23'-7"	D	32	33	36	41	13'-6"	C	26	29	32	36						
	4	6'-0"	A	22'-3"	D	33	33	36	40	12'-2"	C	27	28	31	36						
	4.5	5'-4"	A	20'-8"	D	33	33	35	40	11'-1"	C	27	28	31	35						
	5	4'-10"	A	19'-4"	D	33	33	35	39	10'-2"	C	27	27	30	35						
	5.5	4'-4"	A	18'-2"	D	34	34	34	39	9'-3"	C	27	27	30	34						
	6	4'-0"	A	17'-1"	D	34	34	34	38	8'-6"	C	27	27	29	33						
	6.5	3'-8"	A	16'-3"	D	34	34	34	38	7'-10"	C	27	27	29	33						
	7	3'-5"	A	15'-5"	D	35	35	35	37	7'-4"	C	27	27	28	33						
	7.5	3'-2"	A	14'-9"	D	35	35	35	37	6'-10"	C	27	27	28	32						
	8	3'-0"	A	14'-1"	D	35	35	35	37	6'-5"	C	27	27	28	32						
	8.5	2'-10"	A	13'-6"	D	35	35	35	36	6'-0"	C	27	27	27	32						
	9	2'-8"	A	12'-11"	E	36	36	36	36	5'-8"	C	27	27	27	31						

4/27/2009

SOLID COVER 6.0 POST SPACINGS FOR PATIO AND COMMERCIAL COVERS HIGH WIND AREAS

TABLE 6.5

GROUND SNOW LOAD (PSF)	TRIB WIDTH (FT)	MAX POST SPACING ON SLAB (FT)	POST REQ'D FOR SLAB	12 Ga 3"x8" Steel C Beam (Detail T) MAX POST SPACING (FT)	Attached Structure MIN POST TYPE	Attached Structure FOOTER SIZE "d" (in)	Freestanding or Multispan Units MAX POST LENGTH 8' CONSTRAINED FOOTER "d" (in)	12' "d" (in)	18' "d" (in)	16 Ga 3"x8" Steel C Beam (Detail T) MAX POST SPACING (FT)	Attached Structure MIN POST TYPE	Attached Structure FOOTER SIZE "d" (in)	Freestanding or Multispan Units MAX POST LENGTH 8' CONSTRAINED FOOTER "d" (in)	12' "d" (in)	18' "d" (in)	Double 12 Ga 3"x8" Steel C Beam (T and AY) MAX POST SPACING (FT)	Attached Structure MIN POST TYPE	Attached Structure FOOTER SIZE "d" (in)	Freestanding or Multispan Units MAX POST LENGTH 8' CONSTRAINED FOOTER "d" (in)	12' "d" (in)	18' "d" (in)
110 MPH EXPOSURE C																					
20 LIVE	3	11'-10"	A	26'-10"	C	33	35	38	43	17'-8"	C	28	31	35	39	30'-0"	D	34	35	39	44
	3.5	10'-2"	A	25'-6"	D	34	34	38	43	15'-10"	C	29	31	34	38	30'-0"	D	36	36	39	44
	4	8'-11"	A	24'-5"	D	35	35	37	42	14'-4"	C	29	30	33	38	30'-0"	D	37	37	39	44
	4.5	7'-11"	A	23'-5"	D	36	36	37	42	13'-2"	C	29	29	33	37	29'-5"	D	38	38	39	44
	5	7'-1"	A	22'-2"	D	36	36	37	41	12'-2"	C	30	30	32	37	28'-6"	D	39	39	39	44
	5.5	6'-5"	A	20'-11"	D	37	37	37	41	11'-3"	C	30	30	32	36	27'-7"	D	40	40	40	43
	6	5'-11"	A	19'-9"	D	37	37	37	40	10'-7"	C	30	30	31	36	26'-10"	D	41	41	41	43
	6.5	5'-5"	A	18'-9"	D	37	37	37	40	9'-9"	C	30	30	31	35	26'-2"	D	42	42	42	43
	7	5'-1"	A	17'-10"	D	38	38	38	39	9'-1"	C	30	30	30	35	25'-6"	E	42	42	42	43
	7.5	4'-9"	A	17'-1"	D	38	38	38	39	8'-6"	C	30	30	30	34	24'-11"	E	43	43	43	43
	8	4'-5"	A	16'-4"	D	38	38	38	39	7'-11"	C	30	30	30	34	24'-5"	E	44	44	44	44
	8.5	4'-2"	A	15'-8"	D	39	39	39	39	7'-6"	C	30	30	30	33	23'-11"	E	44	44	44	44
	9	3'-11"	A	15'-1"	D	39	39	39	39	7'-1"	C	30	30	30	33	23'-5"	E	45	45	45	45
	9.5	3'-9"	A	14'-6"	D	39	39	39	39	6'-8"	C	30	30	30	33	23'-0"	E	45	45	45	45
	10	3'-6"	A	14'-0"	D	39	39	39	39	6'-4"	C	30	30	30	33	22'-6"	E	46	46	46	46
	11	3'-2"	A	13'-2"	D	40	40	40	40	5'-10"	C	30	30	30	32	20'-7"	E	46	46	46	46
120 MPH EXPOSURE C																					
20 LIVE	3	11'-10"	A	25'-6"	C	34	36	40	44	17'-8"	C	30	33	36	41	30'-0"	D	36	37	41	46
	3.5	10'-2"	A	24'-3"	D	35	35	39	44	15'-10"	C	30	32	36	40	30'-0"	D	38	38	41	46
	4	8'-11"	A	23'-3"	D	36	36	39	44	14'-4"	C	31	31	35	39	28'-11"	D	39	39	41	46
	4.5	7'-11"	A	22'-4"	D	37	37	38	43	13'-2"	C	31	31	34	39	27'-11"	D	40	40	40	45
	5	7'-1"	A	21'-7"	D	38	38	38	43	12'-2"	C	31	31	34	38	27'-0"	D	41	41	41	45
	5.5	6'-5"	A	20'-11"	D	39	39	39	43	11'-3"	C	32	32	33	38	26'-2"	D	42	42	42	45
	6	5'-11"	A	19'-9"	D	39	39	39	42	10'-7"	C	32	32	33	37	25'-6"	D	43	43	43	44
	6.5	5'-5"	A	18'-9"	D	40	40	40	42	9'-9"	C	32	32	32	37	24'-10"	D	44	44	44	44
	7	5'-1"	A	17'-10"	D	40	40	40	41	9'-1"	C	32	32	32	36	24'-3"	D	44	44	44	44
	7.5	4'-9"	A	17'-1"	D	40	40	40	41	8'-6"	C	32	32	32	36	23'-8"	E	45	45	45	45
	8	4'-5"	A	16'-4"	D	41	41	41	41	7'-11"	C	32	32	32	35	23'-3"	E	46	46	46	46
	8.5	4'-2"	A	15'-8"	D	41	41	41	41	7'-6"	C	32	32	32	35	22'-9"	E	46	46	46	46
	9	3'-11"	A	15'-1"	D	41	41	41	41	7'-1"	C	32	32	32	35	22'-4"	E	47	47	47	47
	9.5	3'-9"	A	14'-6"	D	41	41	41	41	6'-8"	C	32	32	32	34	22'-0"	E	47	47	47	47
130 MPH EXPOSURE C																					
20 LIVE	3	11'-10"	A	24'-3"	C	35	37	41	46	17'-8"	C	32	34	38	43	30'-0"	D	38	39	43	48
	3.5	10'-2"	A	23'-1"	C	36	36	40	45	15'-10"	C	32	33	37	42	28'-9"	D	39	39	42	47
	4	8'-11"	A	22'-1"	D	38	38	40	45	14'-4"	C	33	33	36	41	27'-7"	D	40	40	42	47
	4.5	7'-11"	A	21'-3"	D	39	39	40	44	13'-2"	C	33	33	36	40	26'-7"	D	42	42	42	47
	5	7'-1"	A	20'-6"	D	40	40	40	44	12'-2"	C	33	33	35	40	25'-8"	D	43	43	43	46
	5.5	6'-5"	A	19'-11"	D	40	40	40	44	11'-3"	C	33	33	34	39	24'-11"	D	44	44	44	46
	6	5'-11"	A	19'-4"	D	41	41	41	44	10'-7"	C	34	34	34	39	24'-3"	D	44	44	44	46
	6.5	5'-5"	A	18'-9"	D	42	42	42	43	9'-9"	C	34	34	34	38	23'-7"	D	45	45	45	45
	7	5'-1"	A	17'-10"	D	42	42	42	43	9'-1"	C	34	34	34	38	23'-1"	D	46	46	46	46
	7.5	4'-9"	A	17'-1"	D	43	43	43	43	8'-6"	C	34	34	34	37	22'-7"	D	47	47	47	47
	8	4'-5"	A	16'-4"	D	43	43	43	43	7'-11"	C	34	34	34	37	22'-1"	E	47	47	47	47
	8.5	4'-2"	A	15'-8"	D	43	43	43	43	7'-6"	C	34	34	34	36	21'-8"	E	48	48	48	48
	9	3'-11"	A	15'-1"	D	43	43	43	43	7'-1"	C	34	34	34	36	21'-3"	E	49	49	49	49
	9.5	3'-9"	A	14'-6"	D	44	44	44	44	6'-8"	C	34	34	34	36	20'-11"	E	49	49	49	49
	10	3'-6"	A	14'-0"	D	44	44	44	44	6'-4"	C	34	34	34	35	20'-6"	E	50	50	50	50

TABLE 6.5

GROUND SNOW LOAD (PSF)	TRIB WIDTH (FT)	MAX POST SPACING ON SLAB (FT)	POST REQ'D FOR SLAB	12 Ga 3"x8" Steel C Beam (Detail T) MAX POST SPACING (FT)	Attached Structure MIN POST TYPE	Attached Structure FOOTER SIZE "d" (in)	Freestanding or Multispan Units MAX POST LENGTH 8' CONSTRAINED FOOTER "d" (in)	12' "d" (in)	18' "d" (in)	16 Ga 3"x8" Steel C Beam (Detail T) MAX POST SPACING (FT)	Attached Structure MIN POST TYPE	Attached Structure FOOTER SIZE "d" (in)	Freestanding or Multispan Units MAX POST LENGTH 8' CONSTRAINED FOOTER "d" (in)	12' "d" (in)	18' "d" (in)	Double 12 Ga 3"x8" Steel C Beam (T and AY) MAX POST SPACING (FT)	Attached Structure MIN POST TYPE	Attached Structure FOOTER SIZE "d" (in)	Freestanding or Multispan Units MAX POST LENGTH 8' CONSTRAINED FOOTER "d" (in)	12' "d" (in)	18' "d" (in)
110 MPH EXPOSURE C																					
40	3	6'-1"	A	22'-5"	D	31	33	37	41	12'-3"	C	25	29	32	37	28'-5"	D	33	35	39	44
	3.5	5'-2"	A	20'-4"	D	31	32	36	40	10'-11"	C	25	28	31	36	27'-0"	E	34	35	38	43
	4	4'-6"	A	18'-8"	D	32	32	35	40	9'-8"	C	25	27	31	35	25'-10"	E	35	35	38	43
	4.5	4'-0"	A	17'-3"	D	32	32	35	39	8'-7"	C	26	27	30	34	24'-10"	E	36	36	38	42
	5	3'-7"	A	16'-1"	D	33	33	34	39	7'-9"	C	26	26	29	34	24'-0"	E	37	37	37	42
	5.5	3'-3"	A	15'-1"	D	33	33	34	38	7'-1"	C	26	26	29	33	23'-3"	E	38	38	38	42
	6	3'-0"	A	14'-2"	D	33	33	33	38	6'-6"	C	26	26	28	33	22'-7"	E	39	39	39	41
	6.5	2'-9"	A	13'-5"	D	33	33	33	37	6'-0"	C	26	26	28	32	21'-2"	E	39	39	39	41
	7	2'-7"	A	12'-9"	E	34	34	34	37	5'-7"	C	26	26	27	32	19'-8"	E	39	39	39	40
	7.5	2'-5"	A	12'-1"	E	34	34	34	36	5'-2"	C	26	26	27	32	18'-5"	E	39	39	39	40
	8	2'-3"	A	11'-7"	E	34	34	34	36	4'-10"	C	26	26	27	31	17'-4"	E	39	39	39	39
	8.5	2'-1"	A	11'-1"	E	34	34	34	36	4'-7"	C	26	26	26	31	16'-4"	E	39	39	39	39
110 MPH EXPOSURE C																					
60	3	4'-1"	A	17'-5"	D	28	31	35	39	8'-8"	C	22	27	30	34	24'-10"	E	32	34	38	42
	3.5	3'-6"	A	15'-8"	D	29	30	34	38	7'-6"	C	22	26	29	33	23'-7"	E	33	33	37	42
	4	3'-0"	A	14'-4"	D	29	30	33	38	6'-7"	C	22	25	28	33	22'-7"	E	34	34	37	41
	4.5	2'-8"	A	13'-2"	E	29	29	33	37	5'-10"	C	22	25	28	32	20'-8"	E	34	34	36	41
	5	2'-5"	A	12'-3"	E	30	30	32	37	5'-3"	C	22	24	27	32	18'-8"	E	34	34	35	40
	5.5	2'-2"	A	11'-5"	E	30	30	32	36	4'-9"	C	22	24	27	31	17'-0"	E	34	34	35	39
	6	2'-0"	A	10'-8"	E	30	30	31	36	4'-4"	C	22	23	26	31	15'-7"	E	34	34	34	38
	6.5	1'-10"	A	10'-1"	E	30	30	31	35	4'-0"	C	22	23	26	31	14'-5"	E	34	34	34	38
	7	1'-9"	A	9'-7"	E	31	31	31	35	3'-9"	C	22	23	26	30	13'-5"	E	34	34	34	37

TABLE 6.2 TRIBUTARY WIDTHS FOR SINGLE SPAN ATTACHED STRUCTURES

OVER-HANG (FT)	PROJECTION OF SINGLE SPAN STUCTURES (FT) 8'	9'	10'	11'	12'	13'	14'	15'	16'	17'	18'	19'	20'	21'	22'
0'	4'	4.5'	5'	5.5'	6'	6.5'	7'	7.5'	8'	8.5'	9'	9.5'	10'	10.5'	11'
1'	4.5'	5'	5.5'	6'	6.5'	7'	7.5'	8'	8.5'	9'	9.5'	10'	10.5'	11'	11.5'
2'	5'	5.5'	6'	6.5'	7'	7.5'	8'	8.5'	9'	9.5'	10'	10.5'	11'	11.5'	12'
3'	5.5'	6'	6.5'	7'	7.5'	8'	8.5'	9'	9.5'	10'	10.5'	11'	11.5'	12'	12.5'
4'	6'	6.5'	7'	7.5'	8'	8.5'	9'	9.5'	10'	10.5'	11'	11.5'	12'	12.5'	13'
5'	6.5'	7'	7.5'	8'	8.5'	9'	9.5'	10'	10.5'	11'	11.5'	12'	12.5'	13'	13.5'

TABLE 6.3 Post Requirements for Attached Structures

Post Description	Max Hgt	POST
Twin 0.062"x1.5"x1.5" ScrolL	9'	A
0.042"x3"x8" Aluminum Post	11'	B
0.024"Post with Sideplates	12'	B
Clover 0.032"x3"x3" Alum	12'	B
Clover 0.040"x3"x3" Alum	12'	B
Colonial 0.062" Extruded	12'	C
0.041"x3"x3" Steel Clover	12'	D
0.041"x3"x3" Steel Clover	8'	E
3/16"x3"x3" Steel Square	15'	F
3/16"x4"x4" Steel Square	18'	G
5/16"x4"x4" Steel Square	18'	H

TABLE 6.4 Post Requirements for Freestanding Structures

Post Description	Maximum Footing	Max Height	POST
0.041"x3"x3" Steel Clover	d = 23"	12'	D
0.041"x3"x3" Steel Clover	d = 23"	8'	E
3/16"x3"x3" Steel Square	d = 32"	15'	F
3/16"x4"x4" Steel Square	d = 38"	18'	G
5/16"x4"x4" Steel Square	d = 42"	18'	H

GENERAL INSTRUCTIONS FOR THESE TABLES

1. CHOOSE FREESTANDING OR ATTACHED STRUCTURE
2. CHOOSE PROJECTION, WIDTH AND OVERHANG OF UNIT
3. DETERMINE WIND AND LIVE OR SNOW LOAD OF STRUCTURE SITE (PATIO UNITS USE 10 PSF MIN, COMMERCIAL UNITS USE 20PSF MIN)
4. CHOOSE A PANEL FROM **TABLES 4.1** TO **4.8** THAT HAS ADEQUATE CLEARSPAN FOR YOUR NEEDS.
5. DETERMINE TRIBUTARY WIDTH FROM TABLE 6.2 OR CALCULATE FROM TRIBUTARY DIAGRAM ON**SC02 PAGE 2 OF 2**
6. CHOOSE A HEADER FROM TABLE 6.5 THAT HAS ADEQUATE POST SPACING.
7. USE THE APPROPRIATE FOOTER SIZE SHOWN.
8. FOR SINGLE SPAN ATTACHED UNIT USE THE POST SHOWN UPGRADE THE POST IF THE HEIGHT IS NOT SUFFICIENT FREESTANDING AND MULTISPAN UNITS USE TABLE 6.4
9. FIND THE O/C SPACING OR # OF FASTENERS FOR ATTACHING TO WALL FROM TABLE 7.5
10. USE THE APPROPRIATE DETAILS

FOR PATIO SLABS FOLLOW 1-6 FROM ABOVE THEN

SLAB 7. DETERMINE MAXIMUM POST SPACING ON SLAB FROM TABLE 6.5
SLAB 8. USE THE SMALLER OF THE POST SPACING ON SLAB OR HEADER POST SPACING
SLAB 9. FOLLOW **9-11** FROM ABOVE
SLAB 10. FOR **TWO** POST STRUCTURES USE **TABLE 7.1** ON SHEET **M3** FOR SLAB REQUIREMENTS INSTEAD OF THESE TABLES
SLAB11. CHECK TABLES **SLAB1** AND **SLAB2** ON **M5** FOR CORNER DISTANCE REQUIRMENTS.

Amerimax Building Products
5208 Tennyson Parkway
Plano, Texas 75024

Carl Putnam, P. E.
3441 Ivylink Place
Lynchburg, VA 24503
carlputnam@comcast.net

REGISTERED PROFESSIONAL ENGINEER
CARL PUTNAM
C 68139
EXP. 6/30/2009
CIVIL
STATE OF CALIFORNIA

4/27/2009

SOLID COVER 6.0 POST SPACINGS FOR PATIO AND COMMERCIAL COVERS HIGH WIND AREAS

TABLE 6.6

GROUND SNOW LOAD (PSF)	TRIB WIDTH (FT)	MAX POST SPACING ON SLAB (FT)	POST REQ'D FOR SLAB	6.5" Roll Formed Fascia (Detail E) MAX POST SPACING (FT)	Attached Structure MIN POST TYPE	Attached Structure FOOTER SIZE "d" (in)	Freestanding or Multispan Units MAX POST LENGTH 8' CONSTRAINED FOOTER "d" (in)	10' CONSTRAINED FOOTER "d" (in)	12' CONSTRAINED FOOTER "d" (in)	California Extruded Fascia (Detail G) MAX POST SPACING (FT)	Attached Structure MIN POST TYPE	Attached Structure FOOTER SIZE "d" (in)	Freestanding or Multispan Units MAX POST LENGTH 8' CONSTRAINED FOOTER "d" (in)	10' CONSTRAINED FOOTER "d" (in)	12' CONSTRAINED FOOTER "d" (in)	Classic Extruded Fascia (Detail H) MAX POST SPACING (FT)	Attached Structure MIN POST TYPE	Attached Structure FOOTER SIZE "d" (in)	Freestanding or Multispan Units MAX POST LENGTH 8' CONSTRAINED FOOTER "d" (in)	10' CONSTRAINED FOOTER "d" (in)	12' CONSTRAINED FOOTER "d" (in)
105 MPH EXPOSURE C																					
10 LIVE	3	22'-8"	A	12'-4"	A	24	26	27	29	12'-1"	A	24	24	25	27	15'-1"	A	26	26	28	29
	3.5	19'-5"	A	11'-0"	A	25	25	27	28	11'-6"	A	25	25	25	26	14'-4"	A	27	27	27	29
	4	17'-0"	A	9'-11"	A	25	25	26	27	11'-0"	A	26	26	26	26	13'-9"	A	28	28	28	28
	4.5	15'-1"	A	9'-0"	A	25	25	26	27	10'-6"	A	26	26	26	26	13'-2"	A	28	28	28	28
	5	13'-7"	A	8'-4"	A	25	25	25	27	10'-2"	A	27	27	27	27	12'-9"	A	29	29	29	29
	5.5	12'-4"	A	7'-8"	A	25	25	25	26	9'-10"	A	28	28	28	28	12'-4"	A	30	30	30	30
	6	11'-4"	A	7'-2"	A	26	26	26	26	9'-5"	A	28	28	28	28	12'-0"	B	30	30	30	30
	6.5	10'-5"	A	6'-8"	A	26	26	26	26	9'-0"	A	28	28	28	28	11'-8"	B	31	31	31	31
	7	9'-8"	A	6'-3"	A	26	26	26	26	8'-8"	A	29	29	29	29	11'-4"	B	31	31	31	31
	7.5	9'-1"	A	5'-11"	A	26	26	26	26	8'-5"	A	29	29	29	29	11'-1"	B	32	32	32	32
	8	8'-6"	A	5'-7"	A	26	26	26	26	8'-1"	A	29	29	29	29	10'-10"	B	32	32	32	32
	8.5	8'-0"	A	5'-4"	A	26	26	26	26	7'-10"	A	30	30	30	30	10'-8"	B	33	33	33	33
	9	7'-6"	A	5'-0"	A	26	26	26	26	7'-8"	B	30	30	30	30	10'-5"	C	33	33	33	33
	9.5	7'-2"	A	4'-10"	A	26	26	26	26	7'-5"	B	30	30	30	30	10'-3"	C	34	34	34	34
	10	6'-9"	A	4'-7"	A	26	26	26	26	7'-3"	B	30	30	30	30	10'-1"	C	34	34	34	34
	11	6'-2"	A	4'-2"	A	26	26	26	26	6'-11"	B	31	31	31	31	9'-9"	C	35	35	35	35
	12	5'-8"	A	3'-11"	A	26	26	26	26	6'-7"	B	31	31	31	31	9'-6"	C	35	35	35	35
	13	5'-2"	A	3'-7"	A	26	26	26	26	6'-4"	B	32	32	32	32	9'-3"	C	36	36	36	36
110 MPH EXPOSURE C																					
10 LIVE	3	22'-8"	A	12'-0"	A	25	26	28	29	11'-8"	A	25	25	26	27	14'-8"	A	27	27	28	30
	3.5	19'-5"	A	11'-0"	A	25	25	27	29	11'-1"	A	26	26	26	27	13'-11"	A	28	28	28	29
	4	17'-0"	A	9'-11"	A	26	26	27	28	10'-8"	A	26	26	26	27	13'-3"	A	28	28	28	29
	4.5	15'-1"	A	9'-0"	A	26	26	26	28	10'-3"	A	27	27	27	27	12'-9"	A	29	29	29	29
	5	13'-7"	A	8'-4"	A	26	26	26	27	9'-10"	A	28	28	28	28	12'-4"	A	30	30	30	30
	5.5	12'-4"	A	7'-8"	A	26	26	26	27	9'-4"	A	28	28	28	28	11'-11"	A	30	30	30	30
	6	11'-4"	A	7'-2"	A	26	26	26	26	8'-11"	A	28	28	28	28	11'-7"	B	31	31	31	31
	6.5	10'-5"	A	6'-8"	A	27	27	27	27	8'-7"	A	29	29	29	29	11'-4"	B	32	32	32	32
	7	9'-8"	A	6'-3"	A	27	27	27	27	8'-3"	A	29	29	29	29	11'-0"	B	32	32	32	32
	7.5	9'-1"	A	5'-11"	A	27	27	27	27	8'-0"	A	30	30	30	30	10'-9"	B	33	33	33	33
	8	8'-6"	A	5'-7"	A	27	27	27	27	7'-9"	A	30	30	30	30	10'-6"	B	33	33	33	33
	8.5	8'-0"	A	5'-4"	A	27	27	27	27	7'-6"	A	30	30	30	30	10'-4"	B	34	34	34	34
	9	7'-6"	A	5'-0"	A	27	27	27	27	7'-3"	A	30	30	30	30	10'-2"	B	34	34	34	34
	9.5	7'-2"	A	4'-10"	A	27	27	27	27	7'-1"	A	31	31	31	31	9'-11"	C	34	34	34	34
	10	6'-9"	A	4'-7"	A	27	27	27	27	6'-11"	B	31	31	31	31	9'-9"	C	35	35	35	35
	11	6'-2"	A	4'-2"	A	27	27	27	27	6'-7"	B	31	31	31	31	9'-6"	C	35	35	35	35
	12	5'-8"	A	3'-11"	A	27	27	27	27	6'-3"	B	32	32	32	32	9'-2"	C	36	36	36	36
	13	5'-2"	A	3'-7"	A	27	27	27	27	6'-0"	B	32	32	32	32	9'-0"	C	37	37	37	37
105 MPH EXPOSURE C																					
20 LIVE	3	11'-10"	A	7'-6"	A	21	23	25	26	11'-4"	A	24	24	25	26	14'-5"	B	26	26	27	29
	3.5	10'-2"	A	6'-7"	A	21	22	24	25	10'-6"	B	24	24	25	26	13'-8"	B	26	26	27	28
	4	8'-11"	A	5'-10"	A	21	22	24	25	9'-9"	B	25	25	25	26	13'-1"	C	27	27	27	28
	4.5	7'-11"	A	5'-3"	A	21	22	23	25	9'-2"	B	25	25	25	25	12'-7"	C	28	28	28	28
	5	7'-1"	A	4'-10"	A	21	21	23	24	8'-7"	B	26	26	26	26	12'-2"	C	29	29	29	29
	5.5	6'-5"	A	4'-5"	A	21	21	22	24	8'-2"	B	26	26	26	26	11'-9"	C	29	29	29	29
	6	5'-11"	A	4'-1"	A	21	21	22	24	7'-9"	B	26	26	26	26	11'-5"	C	30	30	30	30
	6.5	5'-5"	A	3'-9"	A	21	21	22	23	7'-5"	C	27	27	27	27	11'-1"	C	30	30	30	30
	7	5'-1"	A	3'-6"	A	21	21	22	23	7'-2"	C	27	27	27	27	10'-10"	C	31	31	31	31
	7.5	4'-9"	A	3'-4"	A	21	21	21	23	6'-10"	C	27	27	27	27	10'-7"	C	31	31	31	31
	8	4'-5"	A	3'-1"	A	21	21	21	23	6'-7"	C	27	27	27	27	10'-4"	C	32	32	32	32
	8.5	4'-2"	A	2'-11"	A	21	21	21	23	6'-5"	C	28	28	28	28	10'-2"	D	32	32	32	32
	9	3'-11"	A	2'-9"	A	21	21	21	22	6'-2"	C	28	28	28	28	10'-0"	D	33	33	33	33
	9.5	3'-9"	A	2'-8"	A	21	21	21	22	6'-0"	C	28	28	28	28	9'-9"	D	33	33	33	33
	10	3'-6"	A	2'-6"	A	21	21	21	22	5'-10"	C	28	28	28	28	9'-7"	D	33	33	33	33
	11	3'-2"	A	2'-4"	A	22	22	22	23	5'-6"	C	29	29	29	29	9'-2"	D	34	34	34	34
	12	2'-11"	A	2'-1"	A	22	22	22	23	5'-2"	C	29	29	29	29	8'-9"	D	34	34	34	34
	13	2'-8"	A	1'-11"	A	22	22	22	23	4'-11"	C	29	29	29	29	8'-5"	D	35	35	35	35

TABLE 6.6

GROUND SNOW LOAD (PSF)	TRIB WIDTH (FT)	MAX POST SPACING ON SLAB (FT)	POST REQ'D FOR SLAB	6.5" Roll Formed Fascia (Detail E) MAX POST SPACING (FT)	Attached Structure MIN POST TYPE	Attached Structure FOOTER SIZE "d" (in)	Freestanding or Multispan Units MAX POST LENGTH 8' CONSTRAINED FOOTER "d" (in)	10' CONSTRAINED FOOTER "d" (in)	12' CONSTRAINED FOOTER "d" (in)	California Extruded Fascia (Detail G) MAX POST SPACING (FT)	Attached Structure MIN POST TYPE	Attached Structure FOOTER SIZE "d" (in)	Freestanding or Multispan Units MAX POST LENGTH 8' CONSTRAINED FOOTER "d" (in)	10' CONSTRAINED FOOTER "d" (in)	12' CONSTRAINED FOOTER "d" (in)	Classic Extruded Fascia (Detail H) MAX POST SPACING (FT)	Attached Structure MIN POST TYPE	Attached Structure FOOTER SIZE "d" (in)	Freestanding or Multispan Units MAX POST LENGTH 8' CONSTRAINED FOOTER "d" (in)	10' CONSTRAINED FOOTER "d" (in)	12' CONSTRAINED FOOTER "d" (in)
105 MPH EXPOSURE C																					
25	3	9'-7"	A	7'-2"	A	20	23	24	26	11'-1"	B	23	23	25	26	14'-2"	C	25	26	27	29
	3.5	8'-2"	A	6'-4"	A	21	22	24	25	10'-3"	B	24	24	24	26	13'-5"	C	26	26	27	28
	4	7'-2"	A	5'-8"	A	21	22	23	25	9'-6"	B	25	25	25	26	12'-10"	C	27	27	27	28
	4.5	6'-4"	A	5'-1"	A	21	21	23	24	8'-11"	C	25	25	25	25	12'-4"	C	28	28	28	28
	5	5'-9"	A	4'-7"	A	21	21	23	24	8'-5"	C	25	25	25	25	11'-11"	C	29	29	29	29
	5.5	5'-2"	A	4'-3"	A	21	21	22	24	8'-0"	C	26	26	26	26	11'-7"	C	29	29	29	29
	6	4'-9"	A	3'-11"	A	21	21	22	23	7'-7"	C	26	26	26	26	11'-3"	C	30	30	30	30
	6.5	4'-5"	A	3'-8"	A	21	21	22	23	7'-3"	C	26	26	26	26	10'-11"	D	30	30	30	30
	7	4'-1"	A	3'-5"	A	21	21	22	23	6'-11"	C	27	27	27	27	10'-8"	D	31	31	31	31
	7.5	3'-10"	A	3'-2"	A	21	21	21	23	6'-8"	C	27	27	27	27	10'-5"	D	31	31	31	31
	8	3'-7"	A	3'-0"	A	21	21	21	23	6'-5"	C	27	27	27	27	10'-2"	D	32	32	32	32
	8.5	3'-4"	A	2'-10"	A	21	21	21	22	6'-3"	C	27	27	27	27	10'-0"	D	32	32	32	32
	9	3'-2"	A	2'-8"	A	21	21	21	22	6'-0"	C	28	28	28	28	9'-10"	D	33	33	33	33
	9.5	3'-0"	A	2'-6"	A	21	21	21	22	5'-10"	C	28	28	28	28	9'-8"	D	33	33	33	33
110 MPH EXPOSURE C																					
25	3	9'-7"	A	7'-2"	A	21	23	25	26	11'-1"	B	24	24	25	27	14'-2"	C	26	26	28	29
	3.5	8'-2"	A	6'-4"	A	21	23	24	26	10'-3"	B	25	25	25	26	13'-5"	C	27	27	28	29
	4	7'-2"	A	5'-8"	A	21	22	24	25	9'-6"	B	25	25	25	26	12'-10"	C	28	28	28	29
	4.5	6'-4"	A	5'-1"	A	21	22	24	25	8'-11"	C	26	26	26	26	12'-4"	C	29	29	29	29
	5	5'-9"	A	4'-7"	A	22	22	23	25	8'-5"	C	26	26	26	26	11'-11"	C	29	29	29	29
	5.5	5'-2"	A	4'-3"	A	22	22	23	24	8'-0"	C	27	27	27	27	11'-7"	C	30	30	30	30
	6	4'-9"	A	3'-11"	A	22	22	23	24	7'-7"	C	27	27	27	27	11'-3"	C	31	31	31	31
	6.5	4'-5"	A	3'-8"	A	22	22	22	24	7'-3"	C	27	27	27	27	10'-11"	D	31	31	31	31
	7	4'-1"	A	3'-5"	A	22	22	22	24	6'-11"	C	28	28	28	28	10'-8"	D	32	32	32	32
	7.5	3'-10"	A	3'-2"	A	22	22	22	23	6'-8"	C	28	28	28	28	10'-5"	D	32	32	32	32
	8	3'-7"	A	3'-0"	A	22	22	22	23	6'-5"	C	28	28	28	28	10'-2"	D	33	33	33	33
	8.5	3'-4"	A	2'-10"	A	22	22	22	23	6'-3"	C	28	28	28	28	10'-0"	D	33	33	33	33
	9	3'-2"	A	2'-8"	A	22	22	22	23	6'-0"	C	29	29	29	29	9'-10"	D	34	34	34	34
	9.5	3'-0"	A	2'-6"	A	22	22	22	23	5'-10"	C	29	29	29	29	9'-8"	D	34	34	34	34
110 MPH EXPOSURE C																					
30	3	8'-0"	A	6'-3"	A	20	23	24	26	10'-1"	B	24	24	25	26	13'-4"	C	26	26	28	29
	3.5	6'-10"	A	5'-5"	A	20	22	24	25	9'-4"	C	24	24	25	26	12'-8"	C	27	27	27	29
	4	6'-0"	A	4'-10"	A	20	22	23	25	8'-8"	C	25	25	25	26	12'-1"	C	27	27	27	28
	4.5	5'-4"	A	4'-4"	A	20	21	23	24	8'-1"	C	25	25	25	25	11'-8"	C	28	28	28	28
	5	4'-10"	A	3'-11"	A	20	21	23	24	7'-8"	C	25	25	25	25	11'-3"	C	29	29	29	29
	5.5	4'-4"	A	3'-7"	A	20	21	22	24	7'-3"	C	26	26	26	26	10'-11"	D	29	29	29	29
	6	4'-0"	A	3'-4"	A	21	21	22	23	6'-11"	C	26	26	26	26	10'-7"	D	30	30	30	30
	6.5	3'-8"	A	3'-1"	A	21	21	22	23	6'-7"	C	26	26	26	26	10'-3"	D	31	31	31	31
	7	3'-5"	A	2'-10"	A	21	21	22	23	6'-3"	C	27	27	27	27	10'-0"	D	31	31	31	31
	7.5	3'-2"	A	2'-8"	A	21	21	21	23	6'-0"	C	27	27	27	27	9'-10"	D	32	32	32	32
	8	3'-0"	A	2'-6"	A	21	21	21	23	5'-10"	C	27	27	27	27	9'-7"	D	32	32	32	32
	8.5	2'-10"	A	2'-5"	A	21	21	21	23	5'-7"	C	27	27	27	27	9'-4"	D	32	32	32	32
	9	2'-8"	A	2'-3"	A	21	21	21	22	5'-5"	C	28	28	28	28	9'-1"	D	33	33	33	33
105 MPH EXPOSURE C																					
30	3	8'-0"	A	6'-3"	A	19	22	24	25	10'-1"	B	23	23	24	26						
	3.5	6'-10"	A	5'-5"	A	20	22	23	25	9'-4"	C	23	23	24	25						
	4	6'-0"	A	4'-10"	A	20	21	23	24	8'-8"	C	24	24	24	25						
	4.5	5'-4"	A	4'-4"	A	20	21	22	24	8'-1"	C	24	24	24	25						
	5	4'-10"	A	3'-11"	A	20	21	22	23	7'-8"	C	25	25	25	25						
	5.5	4'-4"	A	3'-7"	A	20	20	22	23	7'-3"	C	25	25	25	25						
	6	4'-0"	A	3'-4"	A	20	20	22	23	6'-11"	C	25	25	25	25						
	6.5	3'-8"	A	3'-1"	A	20	20	21	23	6'-7"	C	26	26	26	26						
	7	3'-5"	A	2'-10"	A	20	20	21	22	6'-3"	C	26	26	26	26						
	7.5	3'-2"	A	2'-8"	A	20	20	21	22	6'-0"	C	26	26	26	26						
	8	3'-0"	A	2'-6"	A	20	20	21	22	5'-10"	C	26	26	26	26						
	8.5	2'-10"	A	2'-5"	A	20	20	21	22	5'-7"	C	27	27	27	27						
	9	2'-8"	A	2'-3"	A	20	20	21	22	5'-5"	C	27	27	27	27						

4/27/2009

SOLID COVER 6.0 POST SPACINGS FOR PATIO AND COMMERCIAL COVERS HIGH WIND AREAS

TABLE 6.6

GROUND SNOW LOAD (PSF)	TRIB WIDTH (FT)	MAX POST SPACING ON SLAB (FT)	POST REQ'D FOR SLAB	6.5" Roll Formed Fascia (Detail E) MAX POST SPACING (FT)	MIN POST TYPE	FOOTER SIZE "d" (in)	Attached Structure MAX POST LENGTH 8' CONSTRAINED FOOTER "d" (in)	10' "d" (in)	12' "d" (in)	California Extruded Fascia (Detail G) MAX POST SPACING (FT)	MIN POST TYPE	FOOTER SIZE "d" (in)	Attached Structure MAX POST LENGTH 8' CONSTRAINED FOOTER "d" (in)	10' "d" (in)	12' "d" (in)	Classic Extruded Fascia (Detail H) MAX POST SPACING (FT)	MIN POST TYPE	FOOTER SIZE "d" (in)	Attached Structure MAX POST LENGTH 8' CONSTRAINED FOOTER "d" (in)	10' "d" (in)	12' "d" (in)
110 MPH EXPOSURE C																					
20 LIVE	3	11'-10"	A	7'-6"	A	21	24	25	27	11'-4"	A	24	24	26	27	14'-5"	B	26	26	28	29
	3.5	10'-2"	A	6'-7"	A	21	23	25	26	10'-6"	B	25	25	25	27	13'-8"	B	27	27	28	29
	4	8'-11"	A	5'-10"	A	22	23	24	26	9'-9"	B	26	26	26	26	13'-1"	C	28	28	28	29
	4.5	7'-11"	A	5'-3"	A	22	22	24	25	9'-2"	B	26	26	26	26	12'-7"	C	29	29	29	29
	5	7'-1"	A	4'-10"	A	22	22	23	25	8'-7"	B	26	26	26	26	12'-2"	C	30	30	30	30
	5.5	6'-5"	A	4'-5"	A	22	22	23	24	8'-2"	B	27	27	27	27	11'-9"	C	30	30	30	30
	6	5'-11"	A	4'-1"	A	22	22	23	24	7'-9"	B	27	27	27	27	11'-5"	C	31	31	31	31
	6.5	5'-5"	A	3'-9"	A	22	22	22	24	7'-5"	C	27	27	27	27	11'-1"	C	31	31	31	31
	7	5'-1"	A	3'-6"	A	22	22	22	24	7'-2"	C	28	28	28	28	10'-10"	C	32	32	32	32
	7.5	4'-9"	A	3'-4"	A	22	22	22	23	6'-10"	C	28	28	28	28	10'-7"	C	32	32	32	32
	8	4'-5"	A	3'-1"	A	22	22	22	23	6'-7"	C	28	28	28	28	10'-4"	C	33	33	33	33
	8.5	4'-2"	A	2'-11"	A	22	22	22	23	6'-5"	C	29	29	29	29	10'-2"	D	33	33	33	33
	9	3'-11"	A	2'-9"	A	22	22	22	23	6'-2"	C	29	29	29	29	10'-0"	D	34	34	34	34
	9.5	3'-9"	A	2'-8"	A	22	22	22	23	6'-0"	C	29	29	29	29	9'-9"	D	34	34	34	34
	10	3'-6"	A	2'-6"	A	22	22	22	23	5'-10"	C	29	29	29	29	9'-7"	D	35	35	35	35
	11	3'-2"	A	2'-4"	A	22	22	22	23	5'-6"	C	30	30	30	30	9'-2"	D	35	35	35	35
120 MPH EXPOSURE C																					
20 LIVE	3	11'-10"	A	7'-6"	A	23	25	26	28	11'-4"	A	26	26	27	28	13'-10"	B	28	28	29	31
	3.5	10'-2"	A	6'-7"	A	23	24	26	27	10'-6"	B	27	27	27	28	13'-1"	B	29	29	29	30
	4	8'-11"	A	5'-10"	A	23	24	25	27	9'-9"	B	27	27	27	27	12'-6"	C	29	29	29	30
	4.5	7'-11"	A	5'-3"	A	23	23	25	26	9'-2"	B	28	28	28	28	12'-1"	C	30	30	30	30
	5	7'-1"	A	4'-10"	A	23	23	24	26	8'-7"	B	28	28	28	28	11'-8"	C	31	31	31	31
	5.5	6'-5"	A	4'-5"	A	23	23	24	26	8'-2"	B	28	28	28	28	11'-3"	C	32	32	32	32
	6	5'-11"	A	4'-1"	A	23	23	24	25	7'-9"	B	29	29	29	29	10'-11"	C	32	32	32	32
	6.5	5'-5"	A	3'-9"	A	23	23	23	25	7'-5"	C	29	29	29	29	10'-8"	C	33	33	33	33
	7	5'-1"	A	3'-6"	A	23	23	23	25	7'-2"	C	29	29	29	29	10'-5"	C	33	33	33	33
	7.5	4'-9"	A	3'-4"	A	23	23	23	24	6'-10"	C	30	30	30	30	10'-2"	C	34	34	34	34
	8	4'-5"	A	3'-1"	A	23	23	23	24	6'-7"	C	30	30	30	30	9'-11"	C	34	34	34	34
	8.5	4'-2"	A	2'-11"	A	23	23	23	24	6'-5"	C	30	30	30	30	9'-9"	C	35	35	35	35
	9	3'-11"	A	2'-9"	A	24	24	24	24	6'-2"	C	31	31	31	31	9'-7"	D	35	35	35	35
	9.5	3'-9"	A	2'-8"	A	24	24	24	24	6'-0"	C	31	31	31	31	9'-5"	D	36	36	36	36
130 MPH EXPOSURE C																					
20 LIVE	3	11'-10"	A	7'-6"	A	24	26	27	29	10'-6"	A	27	27	27	29	13'-1"	B	29	29	30	31
	3.5	10'-2"	A	6'-7"	A	24	25	27	28	9'-11"	A	28	28	28	29	12'-5"	B	30	30	30	31
	4	8'-11"	A	5'-10"	A	24	24	26	28	9'-3"	B	28	28	28	28	11'-11"	B	31	31	31	31
	4.5	7'-11"	A	5'-3"	A	24	24	26	27	8'-9"	B	29	29	29	29	11'-5"	C	31	31	31	31
	5	7'-1"	A	4'-10"	A	24	24	25	27	8'-3"	B	29	29	29	29	11'-0"	C	32	32	32	32
	5.5	6'-5"	A	4'-5"	A	25	25	25	27	7'-11"	B	30	30	30	30	10'-8"	C	33	33	33	33
	6	5'-11"	A	4'-1"	A	25	25	25	26	7'-7"	B	30	30	30	30	10'-5"	C	33	33	33	33
	6.5	5'-5"	A	3'-9"	A	25	25	25	26	7'-3"	B	31	31	31	31	10'-1"	C	34	34	34	34
	7	5'-1"	A	3'-6"	A	25	25	25	26	7'-0"	C	31	31	31	31	9'-10"	C	35	35	35	35
	7.5	4'-9"	A	3'-4"	A	25	25	25	25	6'-9"	C	31	31	31	31	9'-8"	C	35	35	35	35
	8	4'-5"	A	3'-1"	A	25	25	25	25	6'-6"	C	32	32	32	32	9'-5"	C	36	36	36	36
	8.5	4'-2"	A	2'-11"	A	25	25	25	25	6'-4"	C	32	32	32	32	9'-3"	C	36	36	36	36
	9	3'-11"	A	2'-9"	A	25	25	25	25	6'-2"	C	32	32	32	32	9'-1"	C	37	37	37	37
	9.5	3'-9"	A	2'-8"	A	25	25	25	25	6'-0"	C	32	32	32	32	8'-11"	D	37	37	37	37
	10	3'-6"	A	2'-6"	A	25	25	25	25	5'-10"	C	33	33	33	33	8'-9"	D	38	38	38	38

TABLE 6.6

GROUND SNOW LOAD (PSF)	TRIB WIDTH (FT)	MAX POST SPACING ON SLAB (FT)	POST REQ'D FOR SLAB	6.5" Roll Formed Fascia (Detail E) MAX POST SPACING (FT)	MIN POST TYPE	FOOTER SIZE "d" (in)	Attached Structure MAX POST LENGTH 8' CONSTRAINED FOOTER "d" (in)	10' "d" (in)	12' "d" (in)	California Extruded Fascia (Detail G) MAX POST SPACING (FT)	MIN POST TYPE	FOOTER SIZE "d" (in)	Attached Structure MAX POST LENGTH 8' CONSTRAINED FOOTER "d" (in)	10' "d" (in)	12' "d" (in)	Classic Extruded Fascia (Detail H) MAX POST SPACING (FT)	MIN POST TYPE	FOOTER SIZE "d" (in)	Attached Structure MAX POST LENGTH 8' CONSTRAINED FOOTER "d" (in)	10' "d" (in)	12' "d" (in)
110 MPH EXPOSURE C																					
40	3	6'-1"	A	4'-11"	A	18	22	23	25	8'-8"	C	22	23	24	26	12'-1"	C	25	25	27	28
	3.5	5'-2"	A	4'-3"	A	19	21	23	24	8'-0"	C	23	23	24	25	11'-6"	C	26	26	27	28
	4	4'-6"	A	3'-9"	A	19	21	22	24	7'-5"	C	23	23	24	25	11'-0"	D	27	27	27	28
	4.5	4'-0"	A	3'-4"	A	19	20	22	23	6'-11"	C	24	24	24	25	10'-7"	D	27	27	27	28
	5	3'-7"	A	3'-1"	A	19	20	22	23	6'-6"	C	24	24	24	25	10'-2"	D	28	28	28	28
	5.5	3'-3"	A	2'-9"	A	19	20	21	23	6'-2"	C	24	24	24	24	9'-11"	D	29	29	29	29
	6	3'-0"	A	2'-7"	A	19	20	21	23	5'-10"	C	25	25	25	25	9'-7"	D	29	29	29	29
	6.5	2'-9"	A	2'-4"	A	19	19	21	22	5'-7"	C	25	25	25	25	9'-4"	D	30	30	30	30
	7	2'-7"	A	2'-2"	A	19	19	21	22	5'-4"	C	25	25	25	25	8'-11"	D	30	30	30	30
	7.5	2'-5"	A	2'-1"	A	19	19	21	22	5'-1"	C	25	25	25	25	8'-8"	D	30	30	30	30
	8	2'-3"	A	1'-11"	A	19	19	21	22	4'-11"	C	26	26	26	26	8'-4"	D	31	31	31	31
	8.5	2'-1"	A	1'-10"	A	19	19	21	22	4'-9"	C	26	26	26	26	8'-1"	D	31	31	31	31
110 MPH EXPOSURE C																					
60	3	4'-1"	A	3'-5"	A	16	20	22	24	7'-0"	C	21	22	23	25	10'-7"	D	24	25	26	28
	3.5	3'-6"	A	2'-11"	A	16	20	22	23	6'-4"	C	21	21	23	24	10'-0"	D	25	25	26	27
	4	3'-0"	A	2'-7"	A	16	20	21	23	5'-11"	C	22	22	23	24	9'-7"	D	25	25	26	27
	4.5	2'-8"	A	2'-4"	A	17	19	21	22	5'-6"	C	22	22	23	24	9'-2"	D	26	26	26	27
	5	2'-5"	A	2'-1"	A	17	19	21	22	5'-2"	C	22	22	22	24	8'-8"	D	26	26	26	27
	5.5	2'-2"	A	1'-11"	A	17	19	20	22	4'-10"	C	23	23	23	24	8'-3"	D	27	27	27	27
	6	2'-0"	A	1'-9"	A	17	19	20	22	4'-7"	C	23	23	23	23	7'-11"	D	27	27	27	27
	6.5	1'-10"	A	1'-7"	A	17	19	20	22	4'-5"	C	23	23	23	23	7'-7"	D	28	28	28	28
	7	1'-9"	A	1'-6"	A	17	19	20	22	4'-2"	D	23	23	23	23	7'-3"	D	28	28	28	28

TABLE 6.2 TRIBUTARY WIDTHS FOR SINGLE SPAN ATTACHED STRUCTURES

OVER-HANG (FT)	PROJECTION OF SINGLE SPAN STUCTURES (FT) 8'	9'	10'	11'	12'	13'	14'	15'	16'	17'	18'	19'	20'	21'	22'
0'	4'	4.5'	5'	5.5'	6'	6.5'	7'	7.5'	8'	8.5'	9'	9.5'	10'	10.5'	11'
1'	4.5'	5'	5.5'	6'	6.5'	7'	7.5'	8'	8.5'	9'	9.5'	10'	10.5'	11'	11.5'
2'	5'	5.5'	6'	6.5'	7'	7.5'	8'	8.5'	9'	9.5'	10'	10.5'	11'	11.5'	12'
3'	5.5'	6'	6.5'	7'	7.5'	8'	8.5'	9'	9.5'	10'	10.5'	11'	11.5'	12'	12.5'
4'	6'	6.5'	7'	7.5'	8'	8.5'	9'	9.5'	10'	10.5'	11'	11.5'	12'	12.5'	13'
5'	6.5'	7'	7.5'	8'	8.5'	9'	9.5'	10'	10.5'	11'	11.5'	12'	12.5'	13'	13.5'

TABLE 6.3 Post Requirements for Attached Structures

Post Description	Max Hgt	POST
Twin 0.062"x1.5"x1.5" ScrolL	9'	A
0.042"x3"x8" Aluminum Post	11'	B
0.024"Post with Sideplates	12'	B
Clover 0.032"x3"x3" Alum	12'	B
Clover 0.040"x3"x3" Alum	12'	B
Colonial 0.062" Extruded	12'	C
0.041"x3"x3" Steel Clover	12'	D
0.041"x3"x3" Steel Clover	8'	E
3/16"x3"x3" Steel Square	15'	F
3/16"x4"x4" Steel Square	18'	G
5/16"x4"x4" Steel Square	18'	H

TABLE 6.4 Post Requirements for Freestanding Structures

Post Description	Maximum Footing	Max Height	POST
0.041"x3"x3" Steel Clover	d = 23"	12'	D
0.041"x3"x3" Steel Clover	d = 23"	8'	E
3/16"x3"x3" Steel Square	d = 32"	15'	F
3/16"x4"x4" Steel Square	d = 38"	18'	G
5/16"x4"x4" Steel Square	d = 42"	18'	H

GENERAL INSTRUCTIONS FOR THESE TABLES

1. CHOOSE FREESTANDING OR ATTACHED STRUCTURE
2. CHOOSE PROJECTION, WIDTH AND OVERHANG OF UNIT
3. DETERMINE WIND AND LIVE OR SNOW LOAD OF STRUCTURE SITE (PATIO UNITS USE 10 PSF MIN, COMMERCIAL UNITS USE 20PSF MIN)
4. CHOOSE A PANEL FROM **TABLES 4.1** TO **4.8** THAT HAS ADEQUATE CLEARSPAN FOR YOUR NEEDS.
5. DETERMINE TRIBUTARY WIDTH FROM TABLE 6.2 OR CALCULATE FROM TRIBUTARY DIAGRAM ON**SC02 PAGE 2 OF 2**
6. CHOOSE A HEADER FROM TABLE 6.6 THAT HAS ADEQUATE POST SPACING.
7. USE THE APPROPRIATE FOOTER SIZE SHOWN.
8. FOR SINGLE SPAN ATTACHED UNIT USE THE POST SHOWN UPGRADE THE POST IF THE HEIGHT IS NOT SUFFICIENT FREESTANDING AND MULTISPAN UNITS USE TABLE 6.4
9. FIND THE O/C SPACING OR # OF FASTENERS FOR ATTACHING TO WALL FROM TABLE 7.5
10. USE THE APPROPRIATE DETAILS

FOR PATIO SLABS FOLLOW 1-6 FROM ABOVE THEN

SLAB 7. DETERMINE MAXIMUM POST SPACING ON SLAB FROM TABLE 6.6
SLAB 8. USE THE SMALLER OF THE POST SPACING ON SLAB OR HEADER POST SPACING
SLAB 9. FOLLOW **9-11** FROM ABOVE
SLAB 10. FOR **TWO** POST STRUCTURES USE **TABLE 7.1** ON SHEET **M3** FOR SLAB REQUIREMENTS INSTEAD OF THESE TABLES
SLAB11. CHECK TABLES **SLAB1** AND **SLAB2** ON **M5** FOR CORNER DISTANCE REQUIRMENTS.

Amerimax Building Products
5208 Tennyson Parkway
Plano, Texas 75024

Carl Putnam, P. E.
3441 Ivylink Place
Lynchburg, VA 24503
carlputnam@comcast.net

REGISTERED PROFESSIONAL ENGINEER
CARL PUTNAM
C 68139
EXP. 6/30/2009
CIVIL
STATE OF CALIFORNIA

4/27/2009

SOLID COVER 6.0 POST SPACINGS FOR PATIO AND COMMERCIAL COVERS HIGH WIND AREAS

TABLE 6.7

GROUND SNOW LOAD (PSF)	TRIB WIDTH (FT)	MAX POST SPACING ON SLAB (FT)	POST REQ'D FOR SLAB	5.5" Extruded Fascia (Detail L) MAX POST SPACING (FT)	Attached Structure MIN POST TYPE	Attached Structure FOOTER SIZE "d" (in)	Freestanding or Multispan Units MAX POST LENGTH 8' CONSTRAINED FOOTER "d" (in)	10' CONSTRAINED FOOTER "d" (in)	12' CONSTRAINED FOOTER "d" (in)	Alaskan Fascia (Detail K) MAX POST SPACING (FT)	Attached Structure MIN POST TYPE	Attached Structure FOOTER SIZE "d" (in)	Freestanding or Multispan Units MAX POST LENGTH 8' CONSTRAINED FOOTER "d" (in)	10' CONSTRAINED FOOTER "d" (in)	12' CONSTRAINED FOOTER "d" (in)	0.041"x3"x3" Cloverleaf (Detail W) MAX POST SPACING (FT)	Attached Structure MIN POST TYPE	Attached Structure FOOTER SIZE "d" (in)	Freestanding or Multispan Units MAX POST LENGTH 8' CONSTRAINED FOOTER "d" (in)	10' CONSTRAINED FOOTER "d" (in)	12' CONSTRAINED FOOTER "d" (in)
105 MPH EXPOSURE C																					
10 LIVE	3	22'-8"	A	10'-8"	A	23	24	25	27	13'-1"	A	25	25	27	28	10'-10"	A	23	23	25	26
	3.5	19'-5"	A	10'-4"	A	24	24	25	27	12'-5"	A	26	26	26	28	10'-3"	A	24	24	25	26
	4	17'-0"	A	10'-0"	A	25	25	25	27	11'-11"	A	26	26	26	27	9'-10"	A	25	25	25	26
	4.5	15'-1"	A	9'-7"	A	26	26	26	26	11'-5"	A	27	27	27	27	9'-5"	A	25	25	25	26
	5	13'-7"	A	9'-5"	A	26	26	26	26	11'-1"	A	28	28	28	28	9'-1"	A	26	26	26	26
	5.5	12'-4"	A	9'-2"	A	27	27	27	27	10'-8"	A	28	28	28	28	8'-10"	A	27	27	27	27
	6	11'-4"	A	8'-11"	A	27	27	27	27	10'-5"	A	29	29	29	29	8'-7"	A	27	27	27	27
	6.5	10'-5"	A	8'-8"	A	28	28	28	28	10'-1"	A	29	29	29	29	8'-4"	A	28	28	28	28
	7	9'-8"	A	8'-5"	A	28	28	28	28	9'-10"	B	30	30	30	30	8'-2"	A	28	28	28	28
	7.5	9'-1"	A	8'-3"	A	29	29	29	29	9'-8"	B	30	30	30	30	7'-11"	A	28	28	28	28
	8	8'-6"	A	8'-1"	A	29	29	29	29	9'-5"	B	31	31	31	31	7'-8"	A	29	29	29	29
	8.5	8'-0"	A	7'-11"	A	30	30	30	30	9'-3"	B	31	31	31	31	7'-5"	A	29	29	29	29
	9	7'-6"	A	7'-9"	B	30	30	30	30	9'-1"	B	32	32	32	32	7'-2"	A	29	29	29	29
	9.5	7'-2"	A	7'-7"	B	30	30	30	30	8'-11"	B	32	32	32	32	7'-0"	A	30	30	30	30
	10	6'-9"	A	7'-6"	B	31	31	31	31	8'-9"	B	32	32	32	32	6'-10"	B	30	30	30	30
	11	6'-2"	A	7'-3"	B	31	31	31	31	8'-6"	C	33	33	33	33	6'-6"	B	30	30	30	30
	12	5'-8"	A	6'-11"	B	32	32	32	32	8'-3"	C	34	34	34	34	6'-3"	B	31	31	31	31
	13	5'-2"	A	6'-8"	B	32	32	32	32	8'-0"	C	34	34	34	34	6'-0"	B	31	31	31	31
110 MPH EXPOSURE C																					
10 LIVE	3	22'-8"	A	10'-6"	A	24	24	26	27	12'-8"	A	25	25	27	28	10'-6"	A	24	24	25	27
	3.5	19'-5"	A	10'-1"	A	25	25	26	27	12'-1"	A	26	26	27	28	9'-11"	A	25	25	25	27
	4	17'-0"	A	9'-8"	A	25	25	26	27	11'-6"	A	27	27	27	28	9'-6"	A	25	25	25	26
	4.5	15'-1"	A	9'-6"	A	26	26	26	27	11'-1"	A	28	28	28	28	9'-2"	A	26	26	26	26
	5	13'-7"	A	9'-2"	A	27	27	27	27	10'-9"	A	28	28	28	28	8'-10"	A	27	27	27	27
	5.5	12'-4"	A	8'-10"	A	28	28	28	28	10'-5"	A	29	29	29	29	8'-7"	A	27	27	27	27
	6	11'-4"	A	8'-7"	A	28	28	28	28	10'-1"	A	30	30	30	30	8'-4"	A	28	28	28	28
	6.5	10'-5"	A	8'-5"	A	29	29	29	29	9'-10"	A	30	30	30	30	8'-1"	A	28	28	28	28
	7	9'-8"	A	8'-2"	A	29	29	29	29	9'-7"	A	31	31	31	31	7'-10"	A	29	29	29	29
	7.5	9'-1"	A	8'-0"	A	30	30	30	30	9'-4"	B	31	31	31	31	7'-6"	A	29	29	29	29
	8	8'-6"	A	7'-10"	A	30	30	30	30	9'-2"	B	32	32	32	32	7'-3"	A	29	29	29	29
	8.5	8'-0"	A	7'-8"	A	30	30	30	30	9'-0"	B	32	32	32	32	7'-1"	A	30	30	30	30
	9	7'-6"	A	7'-6"	A	31	31	31	31	8'-10"	B	32	32	32	32	6'-10"	A	30	30	30	30
	9.5	7'-2"	A	7'-5"	B	31	31	31	31	8'-8"	B	33	33	33	33	6'-8"	A	30	30	30	30
	10	6'-9"	A	7'-3"	B	31	31	31	31	8'-6"	B	33	33	33	33	6'-6"	A	30	30	30	30
	11	6'-2"	A	6'-11"	B	32	32	32	32	8'-3"	B	34	34	34	34	6'-2"	B	31	31	31	31
	12	5'-8"	A	6'-7"	B	32	32	32	32	8'-0"	C	35	35	35	35	5'-11"	B	31	31	31	31
	13	5'-2"	A	6'-4"	B	33	33	33	33	7'-9"	C	35	35	35	35	5'-8"	B	32	32	32	32
105 MPH EXPOSURE C																					
20 LIVE	3	11'-10"	A	10'-8"	A	23	24	25	27	12'-6"	B	24	25	26	28	10'-2"	A	23	23	25	26
	3.5	10'-2"	A	10'-4"	B	24	24	25	27	11'-10"	B	25	25	26	27	9'-6"	A	23	23	24	26
	4	8'-11"	A	10'-0"	B	25	25	25	27	11'-4"	B	26	26	26	27	8'-9"	A	24	24	24	25
	4.5	7'-11"	A	9'-7"	B	26	26	26	26	10'-11"	C	27	27	27	27	8'-1"	B	24	24	24	25
	5	7'-1"	A	9'-5"	B	26	26	26	26	10'-6"	C	27	27	27	27	7'-7"	B	25	25	25	25
	5.5	6'-5"	A	9'-2"	C	27	27	27	27	10'-2"	C	28	28	28	28	7'-1"	B	25	25	25	25
	6	5'-11"	A	8'-11"	C	27	27	27	27	9'-11"	C	29	29	29	29	6'-9"	B	25	25	25	25
	6.5	5'-5"	A	8'-7"	C	28	28	28	28	9'-8"	C	29	29	29	29	6'-5"	B	25	25	25	25
	7	5'-1"	A	8'-3"	C	28	28	28	28	9'-5"	C	29	29	29	29	6'-1"	B	26	26	26	26
	7.5	4'-9"	A	7'-11"	C	28	28	28	28	9'-2"	C	30	30	30	30	5'-10"	B	26	26	26	26
	8	4'-5"	A	7'-7"	C	29	29	29	29	9'-0"	C	30	30	30	30	5'-7"	B	26	26	26	26
	8.5	4'-2"	A	7'-4"	C	29	29	29	29	8'-9"	C	31	31	31	31	5'-4"	B	26	26	26	26
	9	3'-11"	A	7'-1"	C	29	29	29	29	8'-5"	C	31	31	31	31	5'-1"	B	26	26	26	26
	9.5	3'-9"	A	6'-10"	C	29	29	29	29	8'-2"	C	31	31	31	31	4'-11"	B	26	26	26	26
	10	3'-6"	A	6'-8"	C	30	30	30	30	8'-0"	C	31	31	31	31	4'-9"	B	26	26	26	26
	11	3'-2"	A	6'-3"	C	30	30	30	30	7'-7"	C	32	32	32	32	4'-5"	C	27	27	27	27
	12	2'-11"	A	5'-11"	C	30	30	30	30	7'-2"	D	32	32	32	32	4'-2"	C	27	27	27	27
	13	2'-8"	A	5'-8"	C	31	31	31	31	6'-10"	D	33	33	33	33	3'-11"	C	27	27	27	27

TABLE 6.7

GROUND SNOW LOAD (PSF)	TRIB WIDTH (FT)	MAX POST SPACING ON SLAB (FT)	POST REQ'D FOR SLAB	5.5" Extruded Fascia (Detail L) MAX POST SPACING (FT)	Attached Structure MIN POST TYPE	Attached Structure FOOTER SIZE "d" (in)	Freestanding or Multispan Units MAX POST LENGTH 8' CONSTRAINED FOOTER "d" (in)	10' CONSTRAINED FOOTER "d" (in)	12' CONSTRAINED FOOTER "d" (in)	Alaskan Fascia (Detail K) MAX POST SPACING (FT)	Attached Structure MIN POST TYPE	Attached Structure FOOTER SIZE "d" (in)	Freestanding or Multispan Units MAX POST LENGTH 8' CONSTRAINED FOOTER "d" (in)	10' CONSTRAINED FOOTER "d" (in)	12' CONSTRAINED FOOTER "d" (in)	0.041"x3"x3" Cloverleaf (Detail W) MAX POST SPACING (FT)	Attached Structure MIN POST TYPE	Attached Structure FOOTER SIZE "d" (in)	Freestanding or Multispan Units MAX POST LENGTH 8' CONSTRAINED FOOTER "d" (in)	10' CONSTRAINED FOOTER "d" (in)	12' CONSTRAINED FOOTER "d" (in)
105 MPH EXPOSURE C																					
25	3	9'-7"	A	10'-8"	B	23	24	25	27	12'-4"	B	24	25	26	28	10'-0"	B	23	23	25	26
	3.5	8'-2"	A	10'-4"	B	24	24	25	27	11'-8"	C	25	25	26	27	9'-3"	B	23	23	24	26
	4	7'-2"	A	10'-0"	C	25	25	25	27	11'-2"	C	26	26	26	27	8'-6"	B	24	24	24	25
	4.5	6'-4"	A	9'-7"	C	26	26	26	26	10'-9"	C	27	27	27	27	7'-10"	B	24	24	24	25
	5	5'-9"	A	9'-5"	C	26	26	26	26	10'-4"	C	27	27	27	27	7'-4"	B	24	24	24	25
	5.5	5'-2"	A	9'-2"	C	27	27	27	27	10'-0"	C	28	28	28	28	6'-11"	B	25	25	25	25
	6	4'-9"	A	8'-9"	C	27	27	27	27	9'-9"	C	28	28	28	28	6'-6"	C	25	25	25	25
	6.5	4'-5"	A	8'-4"	C	28	28	28	28	9'-6"	C	29	29	29	29	6'-2"	C	25	25	25	25
	7	4'-1"	A	8'-0"	C	28	28	28	28	9'-3"	C	29	29	29	29	5'-11"	C	25	25	25	25
	7.5	3'-10"	A	7'-8"	C	28	28	28	28	9'-1"	C	30	30	30	30	5'-7"	C	25	25	25	25
	8	3'-7"	A	7'-5"	C	28	28	28	28	8'-9"	D	30	30	30	30	5'-4"	C	26	26	26	26
	8.5	3'-4"	A	7'-2"	C	29	29	29	29	8'-6"	D	30	30	30	30	5'-2"	C	26	26	26	26
	9	3'-2"	A	6'-11"	C	29	29	29	29	8'-3"	D	31	31	31	31	4'-11"	C	26	26	26	26
	9.5	3'-0"	A	6'-8"	C	29	29	29	29	8'-0"	D	31	31	31	31	4'-9"	C	26	26	26	26
110 MPH EXPOSURE C																					
25	3	9'-7"	A	10'-6"	B	24	24	26	27	12'-4"	B	25	25	27	28	10'-0"	B	23	24	25	27
	3.5	8'-2"	A	10'-1"	B	25	25	26	27	11'-8"	C	26	26	27	28	9'-3"	B	24	24	25	26
	4	7'-2"	A	9'-8"	B	25	25	26	27	11'-2"	C	27	27	27	28	8'-6"	B	24	24	24	26
	4.5	6'-4"	A	9'-6"	C	26	26	26	27	10'-9"	C	27	27	27	28	7'-10"	B	25	25	25	26
	5	5'-9"	A	9'-2"	C	27	27	27	27	10'-4"	C	28	28	28	28	7'-4"	B	25	25	25	25
	5.5	5'-2"	A	8'-10"	C	28	28	28	28	10'-0"	C	29	29	29	29	6'-11"	B	25	25	25	25
	6	4'-9"	A	8'-7"	C	28	28	28	28	9'-9"	C	29	29	29	29	6'-6"	C	26	26	26	26
	6.5	4'-5"	A	8'-4"	C	29	29	29	29	9'-6"	C	30	30	30	30	6'-2"	C	26	26	26	26
	7	4'-1"	A	8'-0"	C	29	29	29	29	9'-3"	C	30	30	30	30	5'-11"	C	26	26	26	26
	7.5	3'-10"	A	7'-8"	C	29	29	29	29	9'-1"	C	31	31	31	31	5'-7"	C	26	26	26	26
	8	3'-7"	A	7'-5"	C	29	29	29	29	8'-9"	D	31	31	31	31	5'-4"	C	26	26	26	26
	8.5	3'-4"	A	7'-2"	C	30	30	30	30	8'-6"	D	31	31	31	31	5'-2"	C	27	27	27	27
	9	3'-2"	A	6'-11"	C	30	30	30	30	8'-3"	D	32	32	32	32	4'-11"	C	27	27	27	27
	9.5	3'-0"	A	6'-8"	C	30	30	30	30	8'-0"	D	32	32	32	32	4'-9"	C	27	27	27	27
110 MPH EXPOSURE C																					
30	3	8'-0"	A	10'-6"	B	24	24	26	27	11'-7"	C	25	25	26	28	9'-1"	B	23	23	25	26
	3.5	6'-10"	A	10'-1"	C	25	25	26	27	11'-0"	C	25	25	26	28	8'-3"	B	23	23	24	26
	4	6'-0"	A	9'-8"	C	25	25	26	27	10'-6"	C	26	26	26	27	7'-7"	B	24	24	24	25
	4.5	5'-4"	A	9'-4"	C	26	26	26	27	10'-1"	C	27	27	27	27	7'-0"	B	24	24	24	25
	5	4'-10"	A	8'-9"	C	27	27	27	27	9'-9"	C	28	28	28	28	6'-7"	C	24	24	24	25
	5.5	4'-4"	A	8'-4"	C	27	27	27	27	9'-5"	C	28	28	28	28	6'-2"	C	24	24	24	25
	6	4'-0"	A	7'-11"	C	27	27	27	27	9'-2"	C	29	29	29	29	5'-10"	C	25	25	25	25
	6.5	3'-8"	A	7'-6"	C	28	28	28	28	8'-11"	D	29	29	29	29	5'-6"	C	25	25	25	25
	7	3'-5"	A	7'-3"	C	28	28	28	28	8'-7"	D	30	30	30	30	5'-3"	C	25	25	25	25
	7.5	3'-2"	A	6'-11"	C	28	28	28	28	8'-3"	D	30	30	30	30	5'-0"	C	25	25	25	25
	8	3'-0"	A	6'-8"	C	28	28	28	28	8'-0"	D	30	30	30	30	4'-9"	C	25	25	25	25
	8.5	2'-10"	A	6'-5"	C	29	29	29	29	7'-9"	D	30	30	30	30	4'-7"	C	26	26	26	26
	9	2'-8"	A	6'-2"	C	29	29	29	29	7'-6"	D	31	31	31	31	4'-5"	C	26	26	26	26
105 MPH EXPOSURE C																					
30	3	8'-0"	A	10'-8"	B	23	24	25	27	11'-7"	C	24	24	26	27						
	3.5	6'-10"	A	10'-4"	C	24	24	25	27	11'-0"	C	25	25	26	27						
	4	6'-0"	A	10'-0"	C	25	25	25	27	10'-6"	C	25	25	25	27						
	4.5	5'-4"	A	9'-4"	C	25	25	25	26	10'-1"	C	26	26	26	27						
	5	4'-10"	A	8'-9"	C	26	26	26	26	9'-9"	C	27	27	27	27						
	5.5	4'-4"	A	8'-4"	C	26	26	26	26	9'-5"	C	27	27	27	27						
	6	4'-0"	A	7'-11"	C	26	26	26	26	9'-2"	C	28	28	28	28						
	6.5	3'-8"	A	7'-6"	C	27	27	27	27	8'-11"	D	28	28	28	28						
	7	3'-5"	A	7'-3"	C	27	27	27	27	8'-7"	D	29	29	29	29						
	7.5	3'-2"	A	6'-11"	C	27	27	27	27	8'-3"	D	29	29	29	29						
	8	3'-0"	A	6'-8"	C	27	27	27	27	8'-0"	D	29	29	29	29						
	8.5	2'-10"	A	6'-5"	C	28	28	28	28	7'-9"	D	29	29	29	29						
	9	2'-8"	A	6'-2"	C	28	28	28	28	7'-6"	D	30	30	30	30						

4/27/2009

SOLID COVER 6.0 POST SPACINGS FOR PATIO AND COMMERCIAL COVERS HIGH WIND AREAS

TABLE 6.7

GROUND SNOW LOAD (PSF)	TRIB WIDTH (FT)	MAX POST SPACING ON SLAB (FT)	POST REQ'D FOR SLAB	5.5" Extruded Fascia (Detail L) MAX POST SPACING (FT)	Attached Structure MIN POST TYPE	Attached Structure FOOTER SIZE "d" (in)	Freestanding or Multispan Units MAX POST LENGTH 8' CONSTRAINED FOOTER "d" (in)	10' CONSTRAINED FOOTER "d" (in)	12' CONSTRAINED FOOTER "d" (in)	Alaskan Fascia (Detail K) MAX POST SPACING (FT)	Attached Structure MIN POST TYPE	Attached Structure FOOTER SIZE "d" (in)	Freestanding or Multispan Units MAX POST LENGTH 8' CONSTRAINED FOOTER "d" (in)	10' CONSTRAINED FOOTER "d" (in)	12' CONSTRAINED FOOTER "d" (in)	0.041"x3"x3" Cloverleaf (Detail W) MAX POST SPACING (FT)	Attached Structure MIN POST TYPE	Attached Structure FOOTER SIZE "d" (in)	Freestanding or Multispan Units MAX POST LENGTH 8' CONSTRAINED FOOTER "d" (in)	10' CONSTRAINED FOOTER "d" (in)	12' CONSTRAINED FOOTER "d" (in)
110 MPH EXPOSURE C																					
20 LIVE	3	11'-10"	A	10'-6"	A	24	24	26	27	12'-6"	B	25	25	27	28	10'-2"	A	24	24	25	27
	3.5	10'-2"	A	10'-1"	A	25	25	26	27	11'-10"	B	26	26	27	28	9'-6"	A	24	24	25	26
	4	8'-11"	A	9'-8"	B	25	25	26	27	11'-4"	B	27	27	27	28	8'-9"	A	25	25	25	26
	4.5	7'-11"	A	9'-6"	B	26	26	26	27	10'-11"	C	28	28	28	28	8'-1"	B	25	25	25	26
	5	7'-1"	A	9'-2"	B	27	27	27	27	10'-6"	C	28	28	28	28	7'-7"	B	25	25	25	25
	5.5	6'-5"	A	8'-10"	C	28	28	28	28	10'-2"	C	29	29	29	29	7'-1"	B	26	26	26	26
	6	5'-11"	A	8'-7"	C	28	28	28	28	9'-11"	C	29	29	29	29	6'-9"	B	26	26	26	26
	6.5	5'-5"	A	8'-5"	C	29	29	29	29	9'-8"	C	30	30	30	30	6'-5"	B	26	26	26	26
	7	5'-1"	A	8'-2"	C	29	29	29	29	9'-5"	C	30	30	30	30	6'-1"	B	26	26	26	26
	7.5	4'-9"	A	7'-11"	C	29	29	29	29	9'-2"	C	31	31	31	31	5'-10"	B	27	27	27	27
	8	4'-5"	A	7'-7"	C	30	30	30	30	9'-0"	C	31	31	31	31	5'-7"	B	27	27	27	27
	8.5	4'-2"	A	7'-4"	C	30	30	30	30	8'-9"	C	32	32	32	32	5'-4"	B	27	27	27	27
	9	3'-11"	A	7'-1"	C	30	30	30	30	8'-5"	C	32	32	32	32	5'-1"	B	27	27	27	27
	9.5	3'-9"	A	6'-10"	C	30	30	30	30	8'-2"	C	32	32	32	32	4'-11"	B	27	27	27	27
	10	3'-6"	A	6'-8"	C	31	31	31	31	8'-0"	C	32	32	32	32	4'-9"	B	27	27	27	27
	11	3'-2"	A	6'-3"	C	31	31	31	31	7'-7"	C	33	33	33	33	4'-5"	C	28	28	28	28
120 MPH EXPOSURE C																					
20 LIVE	3	11'-10"	A	10'-1"	A	25	25	27	28	12'-6"	B	27	27	28	30	9'-11"	A	25	25	26	28
	3.5	10'-2"	A	9'-6"	A	26	26	27	28	11'-10"	B	28	28	28	29	9'-5"	A	26	26	26	28
	4	8'-11"	A	9'-4"	B	27	27	27	28	11'-4"	B	29	29	29	29	8'-9"	A	26	26	26	27
	4.5	7'-11"	A	8'-11"	B	27	27	27	28	10'-11"	C	29	29	29	29	8'-1"	B	27	27	27	27
	5	7'-1"	A	8'-8"	B	28	28	28	28	10'-6"	C	30	30	30	30	7'-7"	B	27	27	27	27
	5.5	6'-5"	A	8'-4"	B	29	29	29	29	10'-2"	C	31	31	31	31	7'-1"	B	27	27	27	27
	6	5'-11"	A	8'-2"	C	29	29	29	29	9'-11"	C	31	31	31	31	6'-9"	B	27	27	27	27
	6.5	5'-5"	A	7'-11"	C	30	30	30	30	9'-8"	C	32	32	32	32	6'-5"	B	28	28	28	28
	7	5'-1"	A	7'-9"	C	30	30	30	30	9'-5"	C	32	32	32	32	6'-1"	B	28	28	28	28
	7.5	4'-9"	A	7'-7"	C	31	31	31	31	9'-2"	C	33	33	33	33	5'-10"	B	28	28	28	28
	8	4'-5"	A	7'-5"	C	31	31	31	31	9'-0"	C	33	33	33	33	5'-7"	B	28	28	28	28
	8.5	4'-2"	A	7'-2"	C	32	32	32	32	8'-9"	C	34	34	34	34	5'-4"	B	29	29	29	29
	9	3'-11"	A	7'-0"	C	32	32	32	32	8'-5"	C	34	34	34	34	5'-1"	B	29	29	29	29
	9.5	3'-9"	A	6'-10"	C	32	32	32	32	8'-2"	C	34	34	34	34	4'-11"	B	29	29	29	29
130 MPH EXPOSURE C																					
20 LIVE	3	11'-10"	A	9'-9"	A	26	26	28	29	11'-4"	A	27	27	29	30	9'-4"	A	26	26	27	29
	3.5	10'-2"	A	9'-3"	A	27	27	28	29	10'-10"	B	28	28	28	30	8'-11"	A	27	27	27	28
	4	8'-11"	A	8'-10"	A	28	28	28	29	10'-4"	B	29	29	29	30	8'-6"	A	27	27	27	28
	4.5	7'-11"	A	8'-6"	B	28	28	28	29	9'-11"	B	30	30	30	30	8'-1"	B	28	28	28	28
	5	7'-1"	A	8'-2"	B	29	29	29	29	9'-7"	B	31	31	31	31	7'-7"	B	28	28	28	28
	5.5	6'-5"	A	7'-11"	B	30	30	30	30	9'-3"	C	31	31	31	31	7'-1"	B	29	29	29	29
	6	5'-11"	A	7'-8"	B	30	30	30	30	9'-0"	C	32	32	32	32	6'-9"	B	29	29	29	29
	6.5	5'-5"	A	7'-6"	C	31	31	31	31	8'-9"	C	33	33	33	33	6'-5"	B	29	29	29	29
	7	5'-1"	A	7'-4"	C	31	31	31	31	8'-7"	C	33	33	33	33	6'-1"	B	30	30	30	30
	7.5	4'-9"	A	7'-1"	C	32	32	32	32	8'-4"	C	34	34	34	34	5'-10"	B	30	30	30	30
	8	4'-5"	A	6'-10"	C	32	32	32	32	8'-2"	C	34	34	34	34	5'-7"	B	30	30	30	30
	8.5	4'-2"	A	6'-7"	C	32	32	32	32	8'-0"	C	35	35	35	35	5'-4"	B	30	30	30	30
	9	3'-11"	A	6'-5"	C	33	33	33	33	7'-10"	C	35	35	35	35	5'-1"	B	30	30	30	30
	9.5	3'-9"	A	6'-3"	C	33	33	33	33	7'-9"	C	35	35	35	35	4'-11"	B	30	30	30	30
	10	3'-6"	A	6'-1"	C	33	33	33	33	7'-7"	C	36	36	36	36	4'-9"	B	31	31	31	31

TABLE 6.7

GROUND SNOW LOAD (PSF)	TRIB WIDTH (FT)	MAX POST SPACING ON SLAB (FT)	POST REQ'D FOR SLAB	5.5" Extruded Fascia (Detail L) MAX POST SPACING (FT)	Attached Structure MIN POST TYPE	Attached Structure FOOTER SIZE "d" (in)	Freestanding or Multispan Units MAX POST LENGTH 8' CONSTRAINED FOOTER "d" (in)	10' CONSTRAINED FOOTER "d" (in)	12' CONSTRAINED FOOTER "d" (in)	Alaskan Fascia (Detail K) MAX POST SPACING (FT)	Attached Structure MIN POST TYPE	Attached Structure FOOTER SIZE "d" (in)	Freestanding or Multispan Units MAX POST LENGTH 8' CONSTRAINED FOOTER "d" (in)	10' CONSTRAINED FOOTER "d" (in)	12' CONSTRAINED FOOTER "d" (in)	0.041"x3"x3" Cloverleaf (Detail W) MAX POST SPACING (FT)	Attached Structure MIN POST TYPE	Attached Structure FOOTER SIZE "d" (in)	Freestanding or Multispan Units MAX POST LENGTH 8' CONSTRAINED FOOTER "d" (in)	10' CONSTRAINED FOOTER "d" (in)	12' CONSTRAINED FOOTER "d" (in)
110 MPH EXPOSURE C																					
40	3	6'-1"	A	10'-0"	C	23	24	26	27	10'-6"	C	24	24	26	27	7'-8"	B	21	22	24	25
	3.5	5'-2"	A	9'-2"	C	24	24	25	27	10'-0"	C	25	25	26	27	6'-11"	B	22	22	24	25
	4	4'-6"	A	8'-6"	C	24	24	25	26	9'-6"	C	25	25	26	27	6'-4"	C	22	22	23	25
	4.5	4'-0"	A	8'-0"	C	25	25	25	26	9'-2"	C	26	26	26	27	5'-10"	C	22	22	23	24
	5	3'-7"	A	7'-6"	C	25	25	25	26	8'-10"	D	27	27	27	27	5'-5"	C	23	23	23	24
	5.5	3'-3"	A	7'-1"	C	26	26	26	26	8'-5"	D	27	27	27	27	5'-1"	C	23	23	23	24
	6	3'-0"	A	6'-8"	C	26	26	26	26	8'-0"	D	27	27	27	27	4'-10"	C	23	23	23	24
	6.5	2'-9"	A	6'-5"	C	26	26	26	26	7'-8"	D	28	28	28	28	4'-6"	C	23	23	23	24
	7	2'-7"	A	6'-1"	C	26	26	26	26	7'-4"	D	28	28	28	28	4'-4"	C	23	23	23	23
	7.5	2'-5"	A	5'-10"	D	27	27	27	27	7'-1"	D	28	28	28	28	4'-1"	C	24	24	24	24
	8	2'-3"	A	5'-7"	D	27	27	27	27	6'-10"	D	29	29	29	29	3'-11"	C	24	24	24	24
	8.5	2'-1"	A	5'-5"	D	27	27	27	27	6'-7"	D	29	29	29	29	3'-9"	C	24	24	24	24
110 MPH EXPOSURE C																					
60	3	4'-1"	A	8'-0"	C	22	23	25	26	9'-2"	C	23	24	25	27	5'-11"	C	20	21	23	24
	3.5	3'-6"	A	7'-4"	C	22	23	24	26	8'-8"	D	24	24	25	27	5'-4"	C	20	21	23	24
	4	3'-0"	A	6'-9"	C	23	23	24	25	8'-1"	D	24	24	25	26	4'-10"	C	20	21	22	24
	4.5	2'-8"	A	6'-3"	C	23	23	24	25	7'-7"	D	24	24	24	26	4'-5"	C	21	21	22	23
	5	2'-5"	A	5'-11"	D	23	23	23	25	7'-1"	D	25	25	25	26	4'-1"	C	21	21	22	23
	5.5	2'-2"	A	5'-7"	D	24	24	24	25	6'-9"	D	25	25	25	25	3'-10"	C	21	21	22	23
	6	2'-0"	A	5'-3"	D	24	24	24	24	6'-5"	D	25	25	25	25	3'-7"	C	21	21	21	23
	6.5	1'-10"	A	5'-0"	D	24	24	24	24	6'-1"	D	26	26	26	26	3'-5"	C	21	21	21	23
	7	1'-9"	A	4'-9"	D	24	24	24	24	5'-10"	D	26	26	26	26	3'-2"	C	21	21	21	23

TABLE 6.2 TRIBUTARY WIDTHS FOR SINGLE SPAN ATTACHED STRUCTURES

OVER-HANG (FT)	PROJECTION OF SINGLE SPAN STUCTURES (FT) 8'	9'	10'	11'	12'	13'	14'	15'	16'	17'	18'	19'	20'	21'	22'
0'	4'	4.5'	5'	5.5'	6'	6.5'	7'	7.5'	8'	8.5'	9'	9.5'	10'	10.5'	11'
1'	4.5'	5'	5.5'	6'	6.5'	7'	7.5'	8'	8.5'	9'	9.5'	10'	10.5'	11'	11.5'
2'	5'	5.5'	6'	6.5'	7'	7.5'	8'	8.5'	9'	9.5'	10'	10.5'	11'	11.5'	12'
3'	5.5'	6'	6.5'	7'	7.5'	8'	8.5'	9'	9.5'	10'	10.5'	11'	11.5'	12'	12.5'
4'	6'	6.5'	7'	7.5'	8'	8.5'	9'	9.5'	10'	10.5'	11'	11.5'	12'	12.5'	13'
5'	6.5'	7'	7.5'	8'	8.5'	9'	9.5'	10'	10.5'	11'	11.5'	12'	12.5'	13'	13.5'

TABLE 6.3 Post Requirements for Attached Structures

Post Description	Max Hgt	POST
Twin 0.062"x1.5"x1.5" ScrolL	9'	A
0.042"x3"x8" Aluminum Post	11'	B
0.024"Post with Sideplates	12'	B
Clover 0.032"x3"x3" Alum	12'	B
Clover 0.040"x3"x3" Alum	12'	B
Colonial 0.062" Extruded	12'	C
0.041"x3"x3" Steel Clover	12'	D
0.041"x3"x3" Steel Clover	8'	E
3/16"x3"x3" Steel Square	15'	F
3/16"x4"x4" Steel Square	18'	G
5/16"x4"x4" Steel Square	18'	H

TABLE 6.4 Post Requirements for Freestanding Structures

Post Description	Maximum Footing	Max Height	POST
0.041"x3"x3" Steel Clover	d = 23"	12'	D
0.041"x3"x3" Steel Clover	d = 23"	8'	E
3/16"x3"x3" Steel Square	d = 32"	15'	F
3/16"x4"x4" Steel Square	d = 38"	18'	G
5/16"x4"x4" Steel Square	d = 42"	18'	H

GENERAL INSTRUCTIONS FOR THESE TABLES

1. CHOOSE FREESTANDING OR ATTACHED STRUCTURE
2. CHOOSE PROJECTION, WIDTH AND OVERHANG OF UNIT
3. DETERMINE WIND AND LIVE OR SNOW LOAD OF STRUCTURE SITE (PATIO UNITS USE 10 PSF MIN, COMMERCIAL UNITS USE 20PSF MIN)
4. CHOOSE A PANEL FROM **TABLES 4.1** TO **4.8** THAT HAS ADEQUATE CLEARSPAN FOR YOUR NEEDS.
5. DETERMINE TRIBUTARY WIDTH FROM TABLE 6.2 OR CALCULATE FROM TRIBUTARY DIAGRAM ON**SC02 PAGE 2 OF 2**
6. CHOOSE A HEADER FROM TABLE 6.7 THAT HAS ADEQUATE POST SPACING.
7. USE THE APPROPRIATE FOOTER SIZE SHOWN.
8. FOR SINGLE SPAN ATTACHED UNIT USE THE POST SHOWN UPGRADE THE POST IF THE HEIGHT IS NOT SUFFICIENT FREESTANDING AND MULTISPAN UNITS USE TABLE 6.4
9. FIND THE O/C SPACING OR # OF FASTENERS FOR ATTACHING TO WALL FROM TABLE 7.5
10. USE THE APPROPRIATE DETAILS

FOR PATIO SLABS FOLLOW 1-6 FROM ABOVE THEN

SLAB 7. DETERMINE MAXIMUM POST SPACING ON SLAB FROM TABLE 6.7
SLAB 8. USE THE SMALLER OF THE POST SPACING ON SLAB OR HEADER POST SPACING
SLAB 9. FOLLOW **9-11** FROM ABOVE
SLAB 10. FOR **TWO** POST STRUCTURES USE **TABLE 7.1** ON SHEET **M3** FOR SLAB REQUIREMENTS INSTEAD OF THESE TABLES
SLAB11. CHECK TABLES **SLAB1** AND **SLAB2** ON **M5** FOR CORNER DISTANCE REQUIRMENTS.

Amerimax Building Products
5208 Tennyson Parkway
Plano, Texas 75024

Carl Putnam, P. E.
3441 Ivylink Place
Lynchburg, VA 24503
carlputnam@comcast.net

REGISTERED PROFESSIONAL ENGINEER
CARL PUTNAM
C 68139
EXP. 6/30/2009
CIVIL
STATE OF CALIFORNIA

4/27/2009

SOLID COVER 6.0 POST SPACINGS FOR PATIO AND COMMERCIAL COVERS HIGH WIND AREAS

TABLE 6.8

GROUND SNOW LOAD (PSF)	TRIB WIDTH (FT)	MAX POST SPACING ON SLAB (FT)	POST REQ'D FOR SLAB	4"x3" I Beam (Detail Y) MAX POST SPACING (FT)	Attached Structure MIN POST TYPE	Attached Structure FOOTER SIZE "d" (in)	Freestanding or Multispan Units MAX POST LENGTH 8' CONSTRAINED FOOTER "d" (in)	12' CONSTRAINED FOOTER "d" (in)	18' CONSTRAINED FOOTER "d" (in)	7"x4" I Beam (Detail Q) MAX POST SPACING (FT)	Attached Structure MIN POST TYPE	Attached Structure FOOTER SIZE "d" (in)	Freestanding or Multispan Units MAX POST LENGTH 8' CONSTRAINED FOOTER "d" (in)	12' CONSTRAINED FOOTER "d" (in)	18' CONSTRAINED FOOTER "d" (in)	12 Gau 3.5"x10" Steel C Beam (Detail T) MAX POST SPACING (FT)	Attached Structure MIN POST TYPE	Attached Structure FOOTER SIZE "d" (in)	Freestanding or Multispan Units MAX POST LENGTH 8' CONSTRAINED FOOTER "d" (in)	12' CONSTRAINED FOOTER "d" (in)	18' CONSTRAINED FOOTER "d" (in)
105 MPH EXPOSURE C																					
10 LIVE	3	22'-8"	A	10'-2"	A	23	24	27	NA	14'-1"	A	25	28	32	NA	29'-1"	B	32	36	40	NA
	3.5	19'-5"	A	9'-9"	A	24	24	27	NA	13'-6"	A	26	28	31	NA	27'-1"	C	33	35	39	NA
	4	17'-0"	A	9'-5"	A	24	24	27	NA	13'-1"	A	27	28	31	NA	25'-5"	C	34	35	39	NA
	4.5	15'-1"	A	9'-2"	A	25	25	27	NA	12'-8"	A	28	28	31	NA	24'-1"	C	35	35	38	NA
	5	13'-7"	A	8'-11"	A	26	26	26	NA	12'-5"	A	29	29	31	NA	22'-10"	C	35	35	38	NA
	5.5	12'-4"	A	8'-9"	A	27	27	27	NA	12'-1"	A	30	30	31	NA	22'-3"	C	36	36	37	NA
	6	11'-4"	A	8'-7"	A	27	27	27	NA	11'-10"	B	30	30	30	NA	21'-11"	C	37	37	37	NA
	6.5	10'-5"	A	8'-4"	A	28	28	28	NA	11'-6"	B	31	31	31	NA	21'-7"	C	38	38	38	NA
	7	9'-8"	A	8'-3"	A	28	28	28	NA	11'-4"	B	31	31	31	NA	21'-4"	C	39	39	39	NA
	7.5	9'-1"	A	8'-1"	A	29	29	29	NA	11'-1"	B	32	32	32	NA	21'-1"	C	39	39	39	NA
	8	8'-6"	A	7'-11"	A	29	29	29	NA	11'-0"	B	32	32	32	NA	20'-10"	D	40	40	40	NA
	8.5	8'-0"	A	7'-9"	A	30	30	30	NA	10'-9"	B	33	33	33	NA	20'-8"	D	41	41	41	NA
	9	7'-6"	A	7'-8"	B	30	30	30	NA	10'-8"	C	33	33	33	NA	20'-5"	D	42	42	42	NA
	9.5	7'-2"	A	7'-7"	B	30	30	30	NA	10'-5"	C	34	34	34	NA	20'-4"	D	42	42	42	NA
	10	6'-9"	A	7'-6"	B	31	31	31	NA	10'-5"	C	34	34	34	NA	20'-2"	D	43	43	43	NA
	11	6'-2"	A	7'-4"	B	32	32	32	NA	10'-2"	C	35	35	35	NA	19'-9"	D	44	44	44	NA
	12	5'-8"	A	7'-2"	B	32	32	32	NA	9'-10"	C	36	36	36	NA	19'-7"	D	45	45	45	NA
	13	5'-2"	A	7'-0"	B	33	33	33	NA	9'-9"	C	37	37	37	NA	19'-2"	D	46	46	46	NA
110 MPH EXPOSURE C																					
10 LIVE	3	22'-8"	A	9'-11"	A	23	25	28	NA	13'-9"	A	26	29	32	NA	27'-11"	B	33	36	40	NA
	3.5	19'-5"	A	9'-7"	A	24	24	27	NA	13'-3"	A	27	29	32	NA	26'-0"	B	34	36	40	NA
	4	17'-0"	A	9'-3"	A	25	25	27	NA	12'-9"	A	28	28	32	NA	24'-4"	C	35	35	39	NA
	4.5	15'-1"	A	8'-11"	A	26	26	27	NA	12'-5"	A	29	29	31	NA	23'-1"	C	35	35	39	NA
	5	13'-7"	A	8'-9"	A	27	27	27	NA	12'-1"	A	30	30	31	NA	22'-1"	C	36	36	38	NA
	5.5	12'-4"	A	8'-6"	A	27	27	27	NA	11'-10"	A	30	30	31	NA	21'-10"	C	37	37	38	NA
	6	11'-4"	A	8'-3"	A	28	28	28	NA	11'-6"	B	31	31	31	NA	21'-6"	C	38	38	38	NA
	6.5	10'-5"	A	8'-2"	A	28	28	28	NA	11'-3"	B	32	32	32	NA	21'-3"	C	39	39	39	NA
	7	9'-8"	A	8'-0"	A	29	29	29	NA	11'-1"	B	32	32	32	NA	20'-11"	C	40	40	40	NA
	7.5	9'-1"	A	7'-10"	A	29	29	29	NA	10'-10"	B	33	33	33	NA	20'-10"	C	41	41	41	NA
	8	8'-6"	A	7'-9"	A	30	30	30	NA	10'-9"	B	33	33	33	NA	20'-8"	D	41	41	41	NA
	8.5	8'-0"	A	7'-7"	A	30	30	30	NA	10'-6"	B	34	34	34	NA	20'-3"	D	42	42	42	NA
	9	7'-6"	A	7'-6"	B	31	31	31	NA	10'-5"	C	34	34	34	NA	20'-1"	D	43	43	43	NA
	9.5	7'-2"	A	7'-5"	B	31	31	31	NA	10'-3"	C	35	35	35	NA	19'-11"	D	43	43	43	NA
	10	6'-9"	A	7'-4"	B	32	32	32	NA	10'-2"	C	35	35	35	NA	19'-10"	D	44	44	44	NA
	11	6'-2"	A	7'-1"	B	32	32	32	NA	9'-10"	C	36	36	36	NA	19'-7"	D	45	45	45	NA
	12	5'-8"	A	7'-0"	B	33	33	33	NA	9'-8"	C	37	37	37	NA	19'-1"	D	46	46	46	NA
	13	5'-2"	A	6'-10"	B	34	34	34	NA	9'-6"	C	38	38	38	NA	19'-2"	D	47	47	47	NA
105 MPH EXPOSURE C																					
20 LIVE	3	11'-10"	A	10'-2"	A	23	24	27	31	14'-1"	B	25	28	32	36	26'-0"	C	31	35	39	43
	3.5	10'-2"	A	9'-9"	A	24	24	27	31	13'-6"	B	26	28	31	36	24'-2"	C	32	34	38	43
	4	8'-11"	A	9'-5"	B	24	24	27	31	13'-1"	C	27	28	31	35	22'-8"	D	33	34	38	42
	4.5	7'-11"	A	9'-2"	B	25	25	27	31	12'-8"	C	28	28	31	35	21'-6"	D	33	33	37	42
	5	7'-1"	A	8'-11"	B	26	26	26	31	12'-5"	C	29	29	31	35	20'-11"	D	34	34	37	41
	5.5	6'-5"	A	8'-9"	C	27	27	27	31	12'-1"	C	30	30	31	35	20'-8"	D	35	35	37	41
	6	5'-11"	A	8'-7"	C	27	27	27	31	11'-10"	C	30	30	30	35	20'-3"	D	36	36	37	41
	6.5	5'-5"	A	8'-4"	C	28	28	28	31	11'-6"	C	31	31	31	35	20'-2"	D	37	37	37	41
	7	5'-1"	A	7'-11"	C	28	28	28	30	11'-4"	C	31	31	31	35	19'-11"	D	38	38	38	41
	7.5	4'-9"	A	7'-6"	C	28	28	28	30	11'-1"	C	32	32	32	34	19'-8"	D	39	39	39	41
	8	4'-5"	A	7'-1"	C	28	28	28	30	10'-11"	D	32	32	32	34	19'-5"	D	39	39	39	41
	8.5	4'-2"	A	6'-9"	C	28	28	28	30	10'-5"	D	33	33	33	34	19'-3"	D	40	40	40	41
	9	3'-11"	A	6'-6"	C	28	28	28	30	9'-11"	D	33	33	33	34	19'-1"	E	41	41	41	41
	9.5	3'-9"	A	6'-2"	C	28	28	28	29	9'-6"	D	33	33	33	33	18'-11"	E	41	41	41	41
	10	3'-6"	A	5'-11"	C	28	28	28	29	9'-1"	D	33	33	33	33	19'-0"	E	42	42	42	42
	11	3'-2"	A	5'-6"	C	29	29	29	29	8'-5"	D	33	33	33	33	19'-0"	E	43	43	43	43
	12	2'-11"	A	5'-1"	C	29	29	29	29	7'-10"	D	33	33	33	33	19'-2"	E	45	45	45	45
	13	2'-8"	A	4'-9"	C	29	29	29	29	7'-4"	D	33	33	33	33	19'-2"	E	46	46	46	46

TABLE 6.8

GROUND SNOW LOAD (PSF)	TRIB WIDTH (FT)	MAX POST SPACING ON SLAB (FT)	POST REQ'D FOR SLAB	4"x3" I Beam (Detail Y) MAX POST SPACING (FT)	Attached Structure MIN POST TYPE	Attached Structure FOOTER SIZE "d" (in)	Freestanding or Multispan Units MAX POST LENGTH 8' CONSTRAINED FOOTER "d" (in)	12' CONSTRAINED FOOTER "d" (in)	18' CONSTRAINED FOOTER "d" (in)	7"x4" I Beam (Detail Q) MAX POST SPACING (FT)	Attached Structure MIN POST TYPE	Attached Structure FOOTER SIZE "d" (in)	Freestanding or Multispan Units MAX POST LENGTH 8' CONSTRAINED FOOTER "d" (in)	12' CONSTRAINED FOOTER "d" (in)	18' CONSTRAINED FOOTER "d" (in)	12 Gau 3.5"x10" Steel C Beam (Detail T) MAX POST SPACING (FT)	Attached Structure MIN POST TYPE	Attached Structure FOOTER SIZE "d" (in)	Freestanding or Multispan Units MAX POST LENGTH 8' CONSTRAINED FOOTER "d" (in)	12' CONSTRAINED FOOTER "d" (in)	18' CONSTRAINED FOOTER "d" (in)
105 MPH EXPOSURE C																					
25	3	9'-7"	A	10'-2"	B	23	24	27	31	14'-1"	C	25	28	32	36	25'-6"	D	31	35	39	43
	3.5	8'-2"	A	9'-9"	B	24	24	27	31	13'-6"	C	26	28	31	36	23'-8"	D	32	34	38	43
	4	7'-2"	A	9'-5"	B	24	24	27	31	13'-1"	C	27	28	31	35	22'-5"	D	33	34	37	42
	4.5	6'-4"	A	9'-2"	C	25	25	27	31	12'-8"	C	28	28	31	35	21'-1"	D	33	33	37	41
	5	5'-9"	A	8'-11"	C	26	26	26	31	12'-5"	C	29	29	31	35	20'-9"	D	34	34	37	41
	5.5	5'-2"	A	8'-9"	C	27	27	27	31	12'-1"	C	30	30	31	35	20'-6"	D	35	35	37	41
	6	4'-9"	A	8'-7"	C	27	27	27	31	11'-10"	D	30	30	30	35	20'-2"	D	36	36	37	41
	6.5	4'-5"	A	8'-1"	C	27	27	27	30	11'-6"	D	31	31	31	35	20'-1"	D	37	37	37	41
	7	4'-1"	A	7'-8"	C	28	28	28	30	11'-4"	D	31	31	31	35	19'-10"	E	38	38	38	41
	7.5	3'-10"	A	7'-3"	C	28	28	28	30	11'-1"	D	32	32	32	34	19'-7"	E	38	38	38	41
	8	3'-7"	A	6'-10"	C	28	28	28	30	10'-6"	D	32	32	32	34	19'-4"	E	39	39	39	41
	8.5	3'-4"	A	6'-6"	C	28	28	28	30	10'-0"	D	32	32	32	34	19'-2"	E	40	40	40	41
	9	3'-2"	A	6'-3"	C	28	28	28	29	9'-7"	D	32	32	32	33	19'-0"	E	40	40	40	41
	9.5	3'-0"	A	5'-11"	C	28	28	28	29	9'-2"	D	32	32	32	33	19'-1"	E	41	41	41	41
110 MPH EXPOSURE C																					
25	3	9'-7"	A	9'-11"	B	23	25	28	32	13'-9"	C	26	29	32	37	25'-6"	D	32	36	40	44
	3.5	8'-2"	A	9'-7"	B	24	24	27	32	13'-3"	C	27	29	32	36	23'-8"	D	33	35	39	44
	4	7'-2"	A	9'-3"	B	25	25	27	32	12'-9"	C	28	28	32	36	22'-5"	D	34	35	38	43
	4.5	6'-4"	A	8'-11"	C	26	26	27	32	12'-5"	C	29	29	31	36	21'-1"	D	34	34	38	42
	5	5'-9"	A	8'-9"	C	27	27	27	32	12'-1"	C	30	30	31	36	20'-9"	D	35	35	38	42
	5.5	5'-2"	A	8'-6"	C	27	27	27	31	11'-10"	C	30	30	31	36	20'-6"	D	36	36	38	42
	6	4'-9"	A	8'-3"	C	28	28	28	31	11'-6"	D	31	31	31	35	20'-2"	D	37	37	37	42
	6.5	4'-5"	A	8'-1"	C	28	28	28	31	11'-3"	D	32	32	32	35	20'-1"	D	38	38	38	42
	7	4'-1"	A	7'-8"	C	28	28	28	31	11'-1"	D	32	32	32	35	19'-10"	E	39	39	39	42
	7.5	3'-10"	A	7'-3"	C	29	29	29	31	10'-10"	D	33	33	33	35	19'-7"	E	40	40	40	42
	8	3'-7"	A	6'-10"	C	29	29	29	30	10'-6"	D	33	33	33	35	19'-4"	E	40	40	40	42
	8.5	3'-4"	A	6'-6"	C	29	29	29	30	10'-0"	D	33	33	33	35	19'-2"	E	41	41	41	42
	9	3'-2"	A	6'-3"	C	29	29	29	30	9'-7"	D	33	33	33	34	19'-0"	E	42	42	42	42
	9.5	3'-0"	A	5'-11"	C	29	29	29	30	9'-2"	D	33	33	33	34	19'-1"	E	43	43	43	43
110 MPH EXPOSURE C																					
30	3	8'-0"	A	9'-11"	B	23	25	28	32	13'-9"	C	26	29	32	37	23'-5"	D	31	35	39	43
	3.5	6'-10"	A	9'-7"	C	24	24	27	32	13'-3"	C	27	29	32	36	21'-11"	D	32	34	38	43
	4	6'-0"	A	9'-3"	C	25	25	27	32	12'-9"	C	28	28	32	36	21'-1"	D	33	34	38	42
	4.5	5'-4"	A	8'-11"	C	26	26	27	32	12'-5"	C	29	29	31	36	20'-8"	D	34	34	38	42
	5	4'-10"	A	8'-8"	C	26	26	27	31	12'-1"	D	30	30	31	36	20'-4"	D	35	35	38	42
	5.5	4'-4"	A	8'-1"	C	27	27	27	31	11'-10"	D	30	30	31	36	20'-0"	D	36	36	37	42
	6	4'-0"	A	7'-6"	C	27	27	27	31	11'-6"	D	31	31	31	35	19'-10"	E	37	37	37	42
	6.5	3'-8"	A	7'-1"	C	27	27	27	31	10'-10"	D	31	31	31	35	19'-6"	E	38	38	38	42
	7	3'-5"	A	6'-8"	C	27	27	27	30	10'-2"	D	31	31	31	35	19'-5"	E	39	39	39	42
	7.5	3'-2"	A	6'-3"	C	27	27	27	30	9'-8"	D	31	31	31	34	19'-2"	E	39	39	39	42
	8	3'-0"	A	5'-11"	C	27	27	27	30	9'-2"	D	32	32	32	34	19'-1"	E	40	40	40	42
	8.5	2'-10"	A	5'-8"	C	27	27	27	30	8'-8"	D	32	32	32	34	18'-11"	E	41	41	41	42
	9	2'-8"	A	5'-5"	C	28	28	28	30	8'-3"	D	32	32	32	33	19'-0"	E	42	42	42	42
105 MPH EXPOSURE C																					
30	3	8'-0"	A	10'-2"	B	23	24	27	31	14'-1"	C	25	28	32	36						
	3.5	6'-10"	A	9'-9"	C	24	24	27	31	13'-6"	C	26	28	31	36						
	4	6'-0"	A	9'-5"	C	24	24	27	31	13'-1"	C	27	28	31	35						
	4.5	5'-4"	A	9'-2"	C	25	25	27	31	12'-8"	C	28	28	31	35						
	5	4'-10"	A	8'-8"	C	26	26	26	31	12'-5"	D	29	29	31	35						
	5.5	4'-4"	A	8'-1"	C	26	26	26	30	12'-1"	D	30	30	31	35						
	6	4'-0"	A	7'-6"	C	26	26	26	30	11'-6"	D	30	30	30	35						
	6.5	3'-8"	A	7'-1"	C	26	26	26	30	10'-10"	D	30	30	30	34						
	7	3'-5"	A	6'-8"	C	26	26	26	30	10'-2"	D	30	30	30	34						
	7.5	3'-2"	A	6'-3"	C	26	26	26	29	9'-8"	D	30	30	30	33						
	8	3'-0"	A	5'-11"	C	26	26	26	29	9'-2"	D	31	31	31	33						
	8.5	2'-10"	A	5'-8"	C	27	27	27	29	8'-8"	D	31	31	31	33						
	9	2'-8"	A	5'-5"	C	27	27	27	29	8'-3"	D	31	31	31	33						

4/27/2009

SOLID COVER 6.0 POST SPACINGS FOR PATIO AND COMMERCIAL COVERS HIGH WIND AREAS

TABLE 6.8

GROUND SNOW LOAD (PSF)	TRIB WIDTH (FT)	MAX POST SPACING ON SLAB (FT)	POST REQ'D FOR SLAB	4"x3" I Beam (Detail Y) MAX POST SPACING (FT)	Attached Structure MIN POST TYPE	Attached Structure FOOTER SIZE "d" (in)	Freestanding or Multispan Units MAX POST LENGTH 8' CONSTRAINED FOOTER "d" (in)	12' "d" (in)	18' "d" (in)	7"x4" I Beam (Detail Q) MAX POST SPACING (FT)	Attached Structure MIN POST TYPE	Attached Structure FOOTER SIZE "d" (in)	Freestanding or Multispan Units MAX POST LENGTH 8' CONSTRAINED FOOTER "d" (in)	12' "d" (in)	18' "d" (in)	12 Gau 3.5"x10" Steel C Beam (Detail T) MAX POST SPACING (FT)	Attached Structure MIN POST TYPE	Attached Structure FOOTER SIZE "d" (in)	Freestanding or Multispan Units MAX POST LENGTH 8' CONSTRAINED FOOTER "d" (in)	12' "d" (in)	18' "d" (in)
110 MPH EXPOSURE C																					
20 LIVE	3	11'-10"	A	9'-11"	A	23	25	28	32	13'-9"	B	26	29	32	37	26'-0"	C	32	36	40	45
	3.5	10'-2"	A	9'-7"	A	24	24	27	32	13'-3"	B	27	29	32	36	24'-2"	C	33	35	39	44
	4	8'-11"	A	9'-3"	B	25	25	27	32	12'-9"	C	28	28	32	36	22'-8"	D	34	35	39	43
	4.5	7'-11"	A	8'-11"	B	26	26	27	32	12'-5"	C	29	29	31	36	21'-6"	D	35	35	38	43
	5	7'-1"	A	8'-9"	B	27	27	27	32	12'-1"	C	30	30	31	36	20'-11"	D	35	35	38	42
	5.5	6'-5"	A	8'-6"	B	27	27	27	31	11'-10"	C	30	30	31	36	20'-8"	D	36	36	38	42
	6	5'-11"	A	8'-3"	C	28	28	28	31	11'-6"	C	31	31	31	35	20'-3"	D	37	37	38	42
	6.5	5'-5"	A	8'-2"	C	28	28	28	31	11'-3"	C	32	32	32	35	20'-2"	D	38	38	38	42
	7	5'-1"	A	7'-11"	C	29	29	29	31	11'-1"	C	32	32	32	35	19'-11"	D	39	39	39	42
	7.5	4'-9"	A	7'-6"	C	29	29	29	31	10'-10"	C	33	33	33	35	19'-8"	D	40	40	40	42
	8	4'-5"	A	7'-1"	C	29	29	29	31	10'-9"	D	33	33	33	35	19'-5"	D	41	41	41	42
	8.5	4'-2"	A	6'-9"	C	29	29	29	30	10'-5"	D	34	34	34	35	19'-3"	D	41	41	41	42
	9	3'-11"	A	6'-6"	C	29	29	29	30	9'-11"	D	34	34	34	34	19'-1"	E	42	42	42	42
	9.5	3'-9"	A	6'-2"	C	29	29	29	30	9'-6"	D	34	34	34	34	18'-11"	E	43	43	43	43
	10	3'-6"	A	5'-11"	C	29	29	29	30	9'-1"	D	34	34	34	34	19'-0"	E	43	43	43	43
	11	3'-2"	A	5'-6"	C	30	30	30	30	8'-5"	D	34	34	34	34	19'-0"	E	45	45	45	45
120 MPH EXPOSURE C																					
20 LIVE	3	11'-10"	A	9'-6"	A	24	25	29	33	14'-1"	B	28	30	34	38	25'-8"	C	34	37	41	46
	3.5	10'-2"	A	9'-1"	A	25	25	28	33	13'-6"	B	29	30	34	38	23'-10"	C	35	37	41	46
	4	8'-11"	A	8'-10"	A	26	26	28	33	13'-1"	C	30	30	33	38	22'-5"	D	36	36	40	45
	4.5	7'-11"	A	8'-7"	B	27	27	28	33	12'-8"	C	31	31	33	38	21'-6"	D	37	37	40	45
	5	7'-1"	A	8'-4"	B	28	28	28	33	12'-5"	C	32	32	33	38	20'-11"	D	38	38	39	44
	5.5	6'-5"	A	8'-1"	B	28	28	28	33	12'-1"	C	32	32	33	37	20'-8"	D	39	39	39	44
	6	5'-11"	A	8'-0"	B	29	29	29	32	11'-10"	C	33	33	33	37	20'-3"	D	40	40	40	44
	6.5	5'-5"	A	7'-10"	C	30	30	30	32	11'-6"	C	34	34	34	37	20'-2"	D	41	41	41	44
	7	5'-1"	A	7'-8"	C	30	30	30	32	11'-4"	C	34	34	34	37	19'-11"	D	41	41	41	44
	7.5	4'-9"	A	7'-6"	C	31	31	31	32	11'-1"	C	35	35	35	37	19'-8"	D	42	42	42	44
	8	4'-5"	A	7'-1"	C	31	31	31	32	10'-11"	D	35	35	35	37	19'-5"	D	43	43	43	44
	8.5	4'-2"	A	6'-9"	C	31	31	31	32	10'-5"	D	36	36	36	36	19'-3"	D	44	44	44	44
	9	3'-11"	A	6'-6"	C	31	31	31	32	9'-11"	D	36	36	36	36	19'-1"	E	44	44	44	44
	9.5	3'-9"	A	6'-2"	C	31	31	31	31	9'-6"	D	36	36	36	36	18'-11"	E	45	45	45	45
130 MPH EXPOSURE C																					
20 LIVE	3	11'-10"	A	9'-2"	A	25	26	30	35	12'-8"	B	28	31	34	39	23'-10"	C	35	38	42	48
	3.5	10'-2"	A	8'-9"	A	26	26	29	34	12'-2"	B	29	31	34	39	22'-4"	C	36	38	42	47
	4	8'-11"	A	8'-6"	A	27	27	29	34	11'-9"	B	30	30	34	39	21'-10"	D	37	37	42	47
	4.5	7'-11"	A	8'-3"	B	28	28	29	34	11'-4"	C	31	31	34	38	21'-3"	D	39	39	41	46
	5	7'-1"	A	8'-0"	B	29	29	29	34	11'-1"	C	32	32	33	38	20'-11"	D	40	40	41	46
	5.5	6'-5"	A	7'-10"	B	30	30	30	34	10'-10"	C	33	33	33	38	20'-8"	D	41	41	41	46
	6	5'-11"	A	7'-7"	B	30	30	30	34	10'-6"	C	34	34	34	38	20'-3"	D	42	42	42	46
	6.5	5'-5"	A	7'-6"	C	31	31	31	34	10'-4"	C	34	34	34	38	20'-1"	D	43	43	43	46
	7	5'-1"	A	7'-5"	C	31	31	31	33	10'-1"	C	35	35	35	38	19'-11"	D	44	44	44	46
	7.5	4'-9"	A	7'-3"	C	32	32	32	33	10'-0"	C	36	36	36	38	19'-8"	D	45	45	45	46
	8	4'-5"	A	7'-1"	C	33	33	33	33	9'-10"	C	36	36	36	37	19'-5"	D	45	45	45	45
	8.5	4'-2"	A	6'-9"	C	33	33	33	33	9'-8"	C	37	37	37	37	19'-3"	D	46	46	46	46
	9	3'-11"	A	6'-6"	C	33	33	33	33	9'-7"	D	37	37	37	37	19'-1"	E	47	47	47	47
	9.5	3'-9"	A	6'-2"	C	33	33	33	33	9'-5"	D	38	38	38	38	18'-11"	E	48	48	48	48
	10	3'-6"	A	5'-11"	C	33	33	33	33	9'-1"	D	38	38	38	38	18'-11"	E	48	48	48	48

TABLE 6.8

GROUND SNOW LOAD (PSF)	TRIB WIDTH (FT)	MAX POST SPACING ON SLAB (FT)	POST REQ'D FOR SLAB	4"x3" I Beam (Detail Y) MAX POST SPACING (FT)	Attached Structure MIN POST TYPE	Attached Structure FOOTER SIZE "d" (in)	Freestanding or Multispan Units MAX POST LENGTH 8' CONSTRAINED FOOTER "d" (in)	12' "d" (in)	18' "d" (in)	7"x4" I Beam (Detail Q) MAX POST SPACING (FT)	Attached Structure MIN POST TYPE	Attached Structure FOOTER SIZE "d" (in)	Freestanding or Multispan Units MAX POST LENGTH 8' CONSTRAINED FOOTER "d" (in)	12' "d" (in)	18' "d" (in)	12 Gau 3.5"x10" Steel C Beam (Detail T) MAX POST SPACING (FT)	Attached Structure MIN POST TYPE	Attached Structure FOOTER SIZE "d" (in)	Freestanding or Multispan Units MAX POST LENGTH 8' CONSTRAINED FOOTER "d" (in)	12' "d" (in)	18' "d" (in)
110 MPH EXPOSURE C																					
40	3	6'-1"	A	9'-11"	C	23	25	28	32	13'-9"	C	26	29	32	37	21'-1"	D	30	34	38	42
	3.5	5'-2"	A	9'-2"	C	24	24	27	32	13'-3"	D	27	29	32	36	20'-7"	D	31	34	38	42
	4	4'-6"	A	8'-4"	C	24	24	27	31	12'-8"	D	28	28	32	36	20'-2"	D	33	34	37	42
	4.5	4'-0"	A	7'-7"	C	24	24	26	31	11'-7"	D	28	28	31	35	19'-10"	E	34	34	37	42
	5	3'-7"	A	7'-0"	C	25	25	26	31	10'-8"	D	28	28	31	35	19'-6"	E	35	35	37	42
	5.5	3'-3"	A	6'-5"	C	25	25	26	30	9'-11"	D	29	29	30	34	19'-4"	E	36	36	37	42
	6	3'-0"	A	6'-0"	C	25	25	25	30	9'-3"	D	29	29	30	34	19'-2"	E	37	37	37	42
	6.5	2'-9"	A	5'-7"	C	25	25	25	30	8'-8"	D	29	29	29	34	19'-1"	E	38	38	38	42
	7	2'-7"	A	5'-3"	C	25	25	25	29	8'-1"	D	29	29	29	33	19'-2"	E	39	39	39	42
	7.5	2'-5"	A	5'-0"	C	25	25	25	29	7'-8"	D	29	29	29	33	19'-1"	E	39	39	39	42
	8	2'-3"	A	4'-8"	C	25	25	25	29	7'-3"	D	29	29	29	33	19'-1"	E	40	40	40	42
	8.5	2'-1"	A	4'-5"	C	25	25	25	29	6'-11"	D	29	29	29	32	19'-1"	E	41	41	41	42
110 MPH EXPOSURE C																					
60	3	4'-1"	A	7'-8"	C	21	23	26	31	11'-8"	D	25	28	31	36	20'-0"	E	30	34	37	42
	3.5	3'-6"	A	6'-9"	C	22	23	26	30	10'-4"	D	25	27	30	35	19'-7"	E	31	34	37	42
	4	3'-0"	A	6'-1"	C	22	22	25	30	9'-4"	D	25	26	30	34	19'-2"	E	32	33	37	42
	4.5	2'-8"	A	5'-6"	C	22	22	25	30	8'-5"	D	25	26	29	34	19'-0"	E	33	33	37	42
	5	2'-5"	A	5'-0"	C	22	22	25	29	7'-9"	D	26	26	29	33	19'-0"	E	34	34	37	42
	5.5	2'-2"	A	4'-7"	C	22	22	24	29	7'-2"	D	26	26	28	33	19'-1"	E	36	36	37	42
	6	2'-0"	A	4'-3"	C	22	22	24	29	6'-7"	D	26	26	28	32	19'-0"	E	37	37	37	42
	6.5	1'-10"	A	4'-0"	C	22	22	24	29	6'-2"	D	26	26	27	32	18'-5"	F	37	37	37	41
	7	1'-9"	A	3'-9"	C	22	22	24	28	5'-9"	D	26	26	27	32	17'-9"	F	38	38	38	41

TABLE 6.2 TRIBUTARY WIDTHS FOR SINGLE SPAN ATTACHED STRUCTURES

OVER-HANG (FT)	PROJECTION OF SINGLE SPAN STUCTURES (FT) 8'	9'	10'	11'	12'	13'	14'	15'	16'	17'	18'	19'	20'	21'	22'
0'	4'	4.5'	5'	5.5'	6'	6.5'	7'	7.5'	8'	8.5'	9'	9.5'	10'	10.5'	11'
1'	4.5'	5'	5.5'	6'	6.5'	7'	7.5'	8'	8.5'	9'	9.5'	10'	10.5'	11'	11.5'
2'	5'	5.5'	6'	6.5'	7'	7.5'	8'	8.5'	9'	9.5'	10'	10.5'	11'	11.5'	12'
3'	5.5'	6'	6.5'	7'	7.5'	8'	8.5'	9'	9.5'	10'	10.5'	11'	11.5'	12'	12.5'
4'	6'	6.5'	7'	7.5'	8'	8.5'	9'	9.5'	10'	10.5'	11'	11.5'	12'	12.5'	13'
5'	6.5'	7'	7.5'	8'	8.5'	9'	9.5'	10'	10.5'	11'	11.5'	12'	12.5'	13'	13.5'

TABLE 6.3 Post Requirements for Attached Structures

Post Description	Max Hgt	POST
Twin 0.062"x1.5"x1.5" ScrolL	9'	A
0.042"x3"x8" Aluminum Post	11'	B
0.024"Post with Sideplates	12'	B
Clover 0.032"x3"x3" Alum	12'	B
Clover 0.040"x3"x3" Alum	12'	B
Colonial 0.062" Extruded	12'	C
0.041"x3"x3" Steel Clover	12'	D
0.041"x3"x3" Steel Clover	8'	E
3/16"x3"x3" Steel Square	15'	F
3/16"x4"x4" Steel Square	18'	G
5/16"x4"x4" Steel Square	18'	H

TABLE 6.4 Post Requirements for Freestanding Structures

Post Description	Maximum Footing	Max Height	POST
0.041"x3"x3" Steel Clover	d = 23"	12'	D
0.041"x3"x3" Steel Clover	d = 23"	8'	E
3/16"x3"x3" Steel Square	d = 32"	15'	F
3/16"x4"x4" Steel Square	d = 38"	18'	G
5/16"x4"x4" Steel Square	d = 42"	18'	H

GENERAL INSTRUCTIONS FOR THESE TABLES

1. CHOOSE FREESTANDING OR ATTACHED STRUCTURE
2. CHOOSE PROJECTION, WIDTH AND OVERHANG OF UNIT
3. DETERMINE WIND AND LIVE OR SNOW LOAD OF STRUCTURE SITE (PATIO UNITS USE 10 PSF MIN, COMMERCIAL UNITS USE 20PSF MIN)
4. CHOOSE A PANEL FROM **TABLES 4.1** TO **4.8** THAT HAS ADEQUATE CLEARSPAN FOR YOUR NEEDS.
5. DETERMINE TRIBUTARY WIDTH FROM TABLE 6.2 OR CALCULATE FROM TRIBUTARY DIAGRAM ON**SC02 PAGE 2 OF 2**
6. CHOOSE A HEADER FROM TABLE 6.8 THAT HAS ADEQUATE POST SPACING.
7. USE THE APPROPRIATE FOOTER SIZE SHOWN.
8. FOR SINGLE SPAN ATTACHED UNIT USE THE POST SHOWN UPGRADE THE POST IF THE HEIGHT IS NOT SUFFICIENT FREESTANDING AND MULTISPAN UNITS USE TABLE 6.4
9. FIND THE O/C SPACING OR # OF FASTENERS FOR ATTACHING TO WALL FROM TABLE 7.5
10. USE THE APPROPRIATE DETAILS

FOR PATIO SLABS FOLLOW 1-6 FROM ABOVE THEN

SLAB 7. DETERMINE MAXIMUM POST SPACING ON SLAB FROM TABLE 6.8
SLAB 8. USE THE SMALLER OF THE POST SPACING ON SLAB OR HEADER POST SPACING
SLAB 9. FOLLOW **9-11** FROM ABOVE
SLAB 10. FOR **TWO** POST STRUCTURES USE **TABLE 7.1** ON SHEET **M3** FOR SLAB REQUIREMENTS INSTEAD OF THESE TABLES
SLAB11. CHECK TABLES **SLAB1** AND **SLAB2** ON **M5** FOR CORNER DISTANCE REQUIRMENTS.

Amerimax Building Products
5208 Tennyson Parkway
Plano, Texas 75024

Carl Putnam, P. E.
3441 Ivylink Place
Lynchburg, VA 24503
carlputnam@comcast.net

REGISTERED PROFESSIONAL ENGINEER
CARL PUTNAM
C 68139
EXP. 6/30/2009
CIVIL
STATE OF CALIFORNIA

4/27/2009

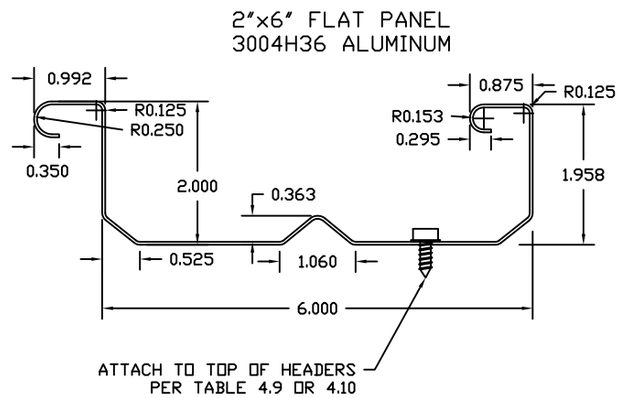

N1

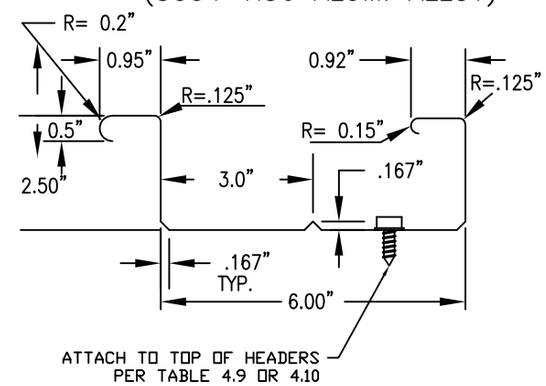

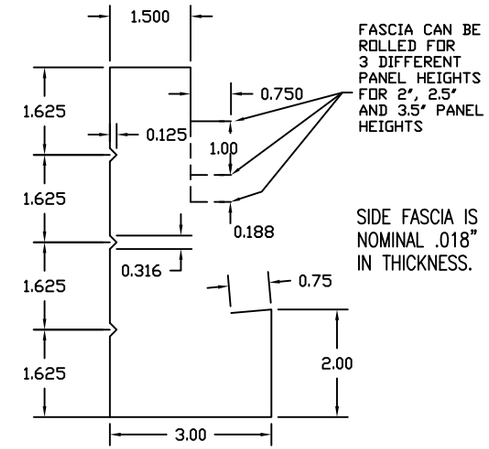

N4 6 1/2" ROLLFORMED HEADER
(3004-H36 ALUM. ALLOY)

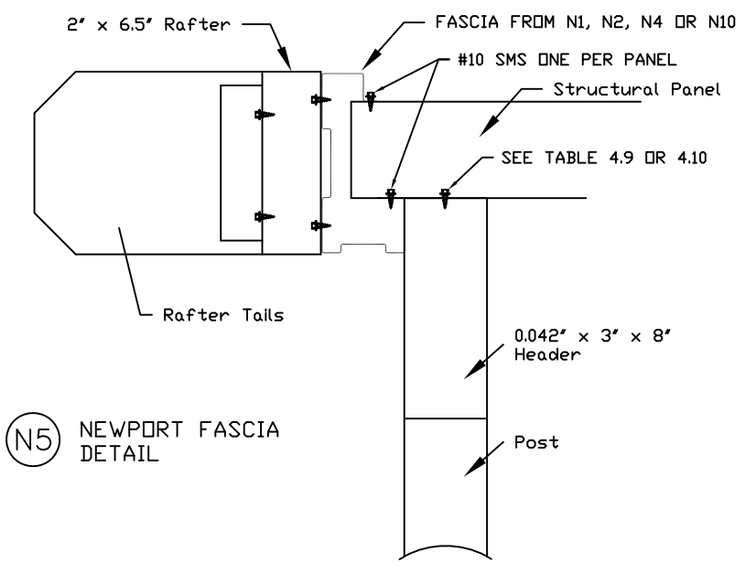

N5 NEWPORT FASCIA
DETAIL

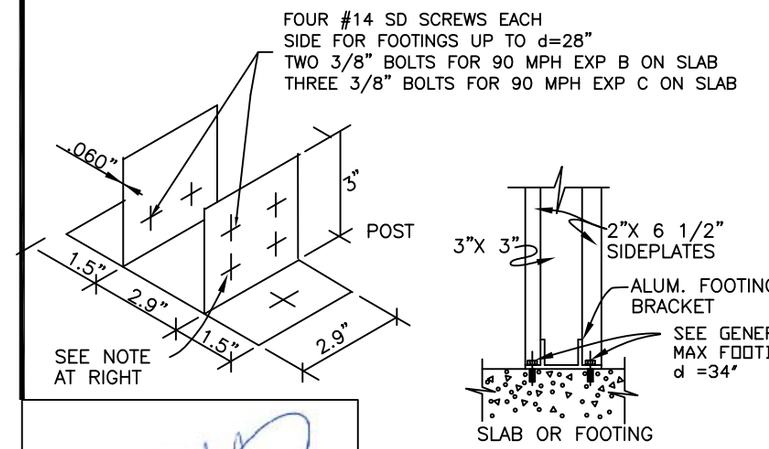

N8 BRACKET FOR CONNECTING POST TO SLAB
OR FOOTING (6063-T6 ALUM ALLOY)
SINGLE SPAN ATTACHED UNITS ONLY

4/27/2009
Engineer's Stamp

Amerimax BUILDING PRODUCTS, INC.
5208 TENNYSON PARKWAY
SUITE 100
PLANO, TEXAS 75024

DRAWN BY: BEJ/CP	TYPE:	
SCALE: NTS	NAME: Component Parts & Connection Details for Newport Patio Structures	
DATE:	FILE#: NP01-2006	SHEET: 1 of 4

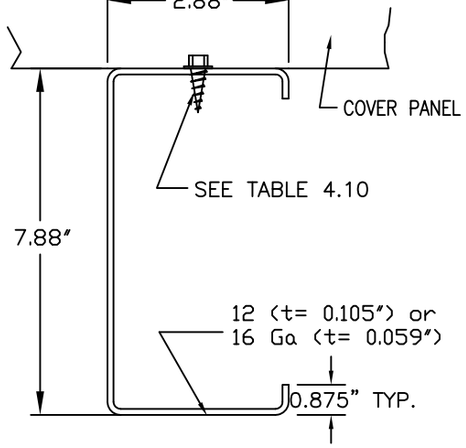

N9 STEEL "C"– CHANNEL HEADER
(STEEL A–653 Fy=50 KSI)

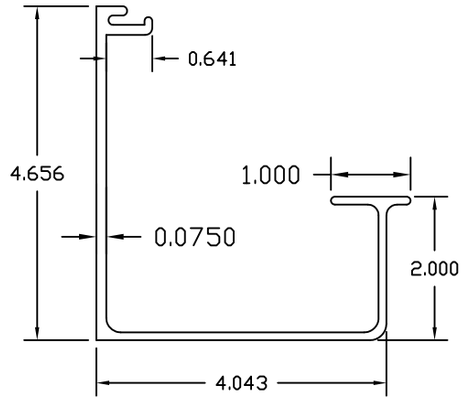

N10 CALIFORNIA FASCIA
(ALUM 6063 T6)

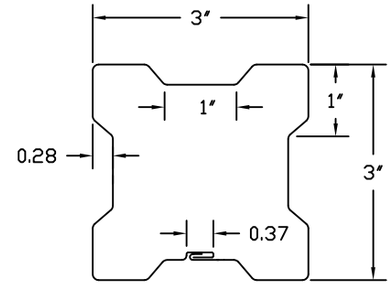

t= 0.032" ALUM
= 0.040" ALUM
= 0.041" STEEL

NOTE:
POSTS MAY BE TRIMMED w/FLEX ALUM. FACING.

N11 3" ALTERNATE POST
(3004–H36 ALUM. ALLOY OR
A–653 Fy=40 KSI STEEL)

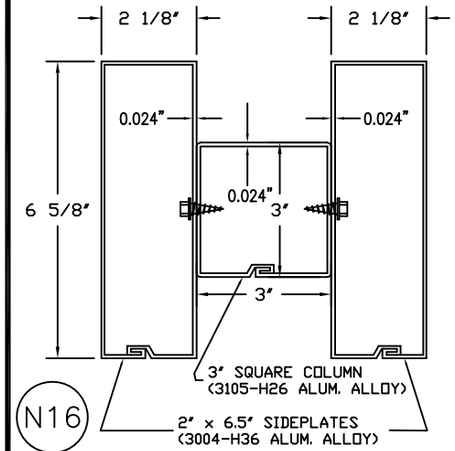

N16 SIDEPLATE CONNECTION DETAIL

MAX "L" FOR TOP OR SIDE MOUNT		
	TRUSS/RAFTER	
Live	O/C SPACING	
Load	16" o/c	24"o/c
10	21'-6"	14'-4"
20	11'-3"	7'-6"

NOT ALLOWED IN SNOW LOAD AREAS
MAX WIND LOAD IS 105 MPH EXP C

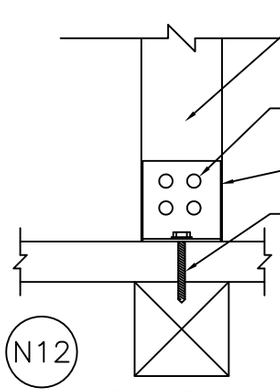

N12 ATTACHED STRUCTURE POST
TO DECK FLOOR JOIST

THESE DETAILS ARE LIMITED TO 90 mph EXPOSURE B AND C

SEE GENERAL NOTE 19

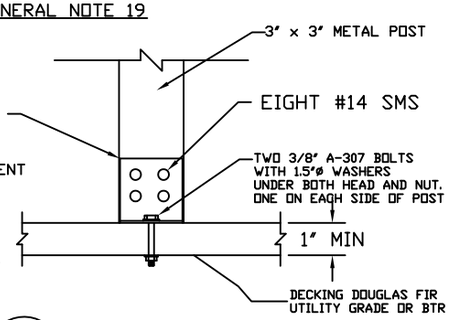

N13 ATTACHED STRUCTURE POST
TO DECKING

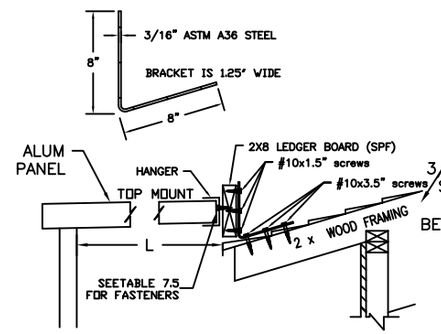

TOP MOUNT BRACKET

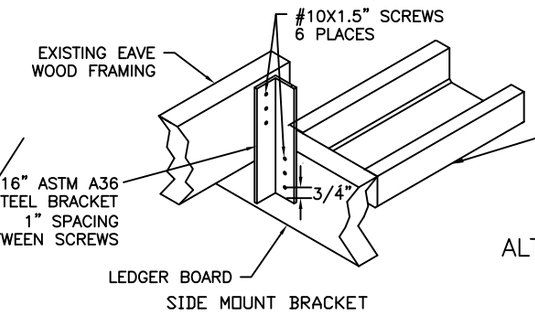

N18 ALTERNATIVE EAVE ATTACHMENT

EAVE OVERHANG AND "L" MUST ALSO COMPLY WITH DETAIL N21

ALL HOUSE PENETRATIONS MUST BE COMPLETELY AND PERMANENTLY SEALED

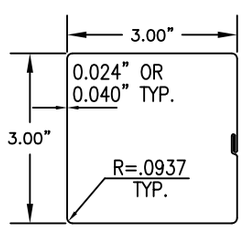

N14 3" SQUARE POST
(3105–H26 ALUM. ALLOY)

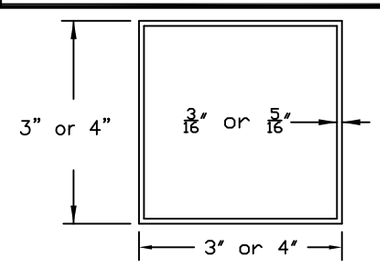

N17 ASTM A500 STEEL POST GRADE A

4/27/2009
Engineer's Stamp

Amerimax BUILDING PRODUCTS, INC.
5208 TENNYSON PARKWAY
SUITE 100
PLANO, TEXAS 75024

DRAWN BY: BEJ/CP	TYPE:	
SCALE: NTS	NAME: Component Parts & Connection Details for Newport Patio Structures	
DATE:	FILE#: NP02–2006	SHEET: 2 of 4

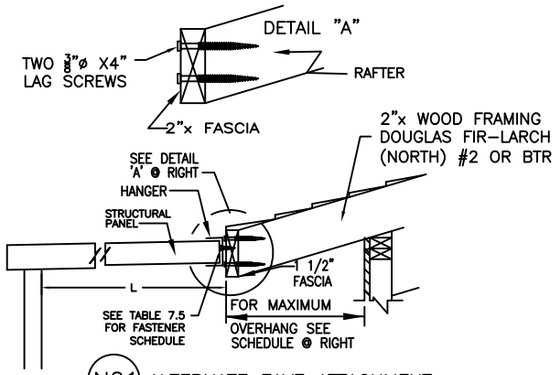

N21 ALTERNATE EAVE ATTACHMENT

Live/Snow Load Solid Cover Wind	RAFTER SIZE (24" O/C)	MAX DISTANCE TO FIRST ROW OF POSTS "L" EAVE OVERHANG 12"	18"	24"	30"	36"
10 psf 90 MPH Exp B	2x4	15'-8"	8'-11"	5'-6"	2'-6"	0'-2"
	2x6	22'-0'	22'-0'	17'-4"	13'-8"	9'-6"
	2x8	22'-0'	22'-0'	22'-0'	22'-0'	22'-0'
10 psf 90 MPH Exp C	2x4	11'-2"	6'-7"	4'-1"	2'-4"	0'-2"
	2x6	22'-0'	22'-0'	15'-1"	10'-1"	7'-2"
	2x8	22'-0'	22'-0'	22'-0'	22'-0'	22'-0'
20 psf 105 MPH Exp B	2x4	8'-6"	4'-9"	2'-8"	1'-3"	0'-1"
	2x6	12'-4'	12'-4'	9'-8"	6'-10"	4'-9"
	2x8	12'-4'	12'-4'	12'-4'	12'-4'	11'-6"
25 psf 105 MPH Exp C	2x4	6'-9"	3'-9"	2'-1"	0'-10"	0'-0"
	2x6	13'-7'	11'-3"	7'-8"	5'-4"	3'-8"
	2x8	13'-7'	13'-7'	13'-7'	11'-10"	9'-1"
30 psf 110 MPH Exp C	2x4	5'-6"	3'-0"	1'-6"	0'-4"	0'-0"
	2x6	11'-1"	9'-2"	6'-1"	4'-1"	2'-8"
	2x8	11'-4'	11'-4'	11'-4'	9'-6"	7'-1"
40 psf	2x4	3'-10"	1'-10"	0'-8"	0'-0"	0'-0"
	2x6	7'-10"	6'-7"	4'-2"	2'-7"	1'-4"
	2x8	8'-4'	8'-4'	8'-4'	6'-7"	4'-8"
60 psf	2x4	2'-3"	0'-10"	0'-0"	0'-0"	0'-0"
	2x6	4'-8"	3'-10"	2'-2"	1'-0"	0'-1"
	2x8	5'-9'	5'-9'	5'-3"	3'-8"	5'-9'

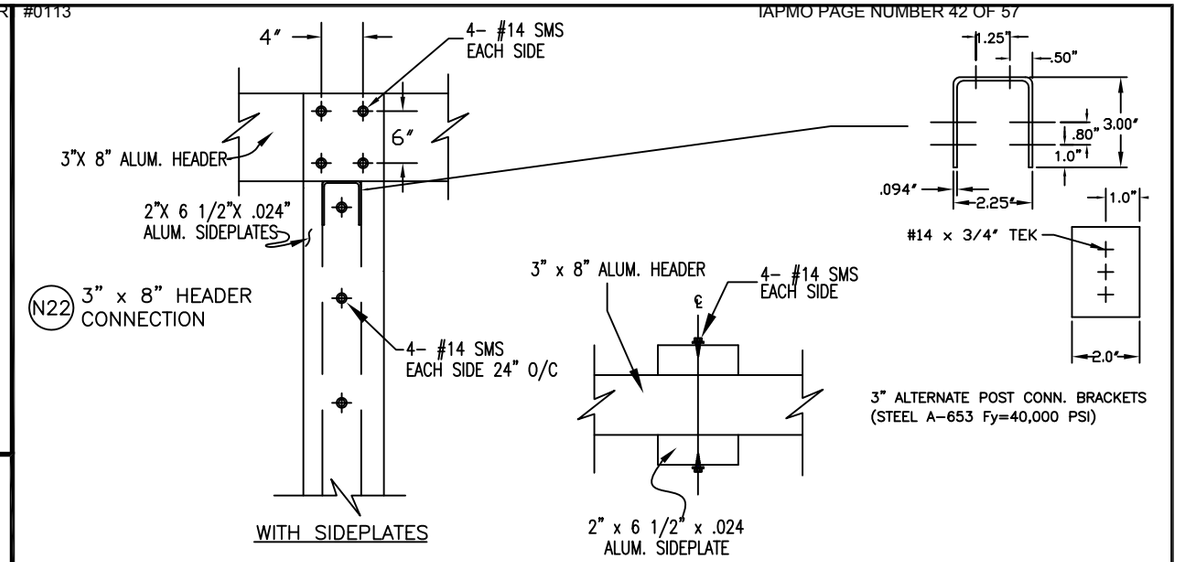

N22 3" x 8" HEADER CONNECTION

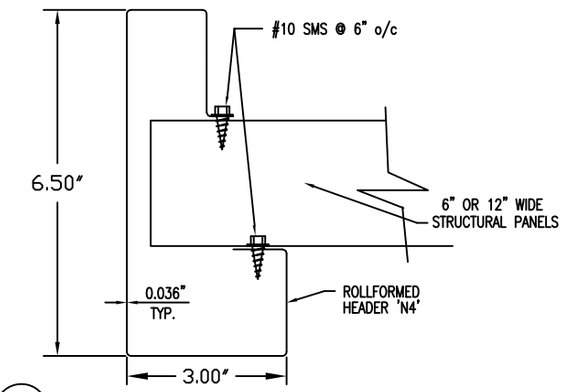

N23 ROLLFORMED HEADER 'N4' CONN. DETAILS TO STRUCTURAL PANELS

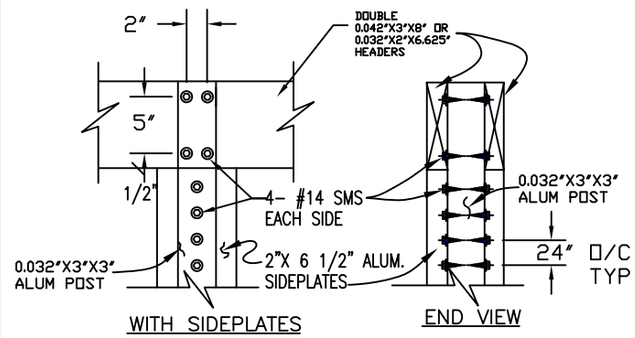

N24 DOUBLE ALUM HEADER CONNECTION

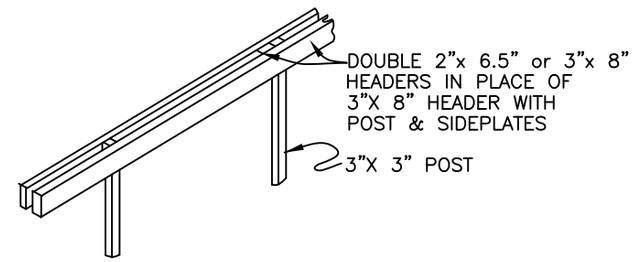

N25 DOUBLE 2" x 6 .5" HEADERS or DOUBLE 3" x 8" HEADERS

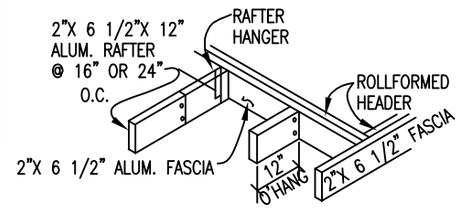

N28 ALTERNATE-DECORATIVE FASCIA TRIM

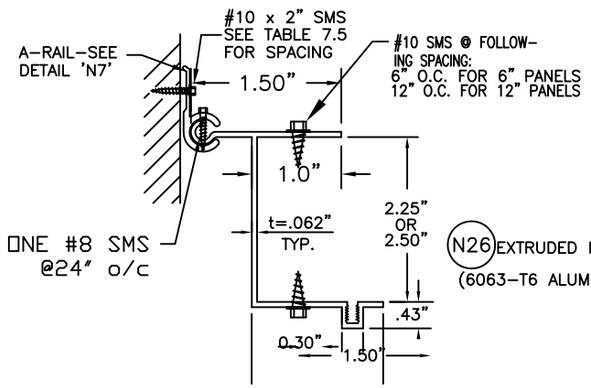

N26 EXTRUDED HANGER (6063-T6 ALUM. ALLOY)

SEE TABLE 7.5 NOTE #6 FOR END FASTENING REQUIREMENTS

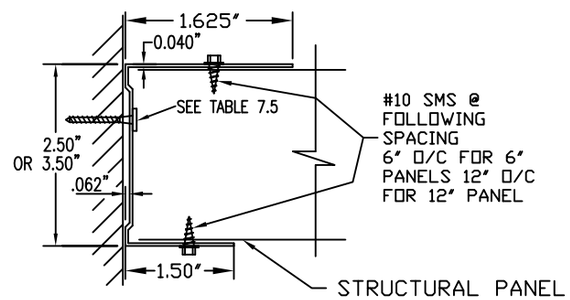

N27 ROLLFORMED HANGER (3004-H36 ALUM. ALLOY)

4/27/2009
Engineer's Stamp

Amerimax BUILDING PRODUCTS, INC.
5208 TENNYSON PARKWAY
SUITE 100
PLANO, TEXAS 75024

DRAWN BY: BEJ/CP	TYPE:	
SCALE: NTS	NAME: Component Parts & Connection Details for Newport Patio Structures	
DATE:	FILE#: NP03-2006	SHEET: 3 of 4

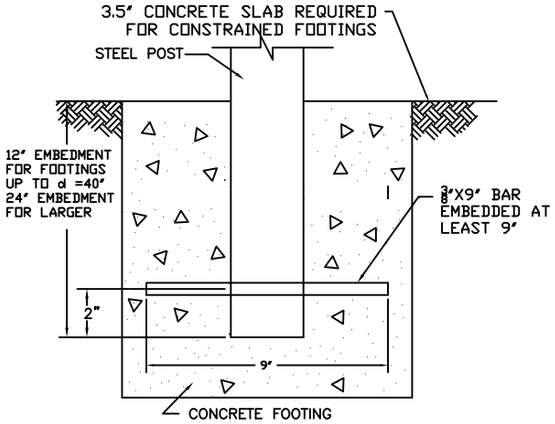

N29 FREESTANDING OR ATTACHED POST/FOOTING CONNECTION

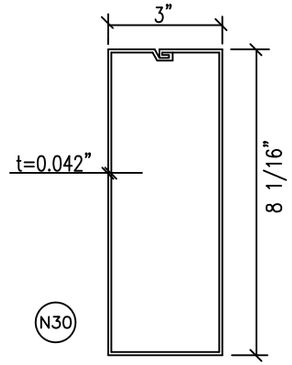

N30

HEADER
(3004-H36 ALUM. ALLOY)

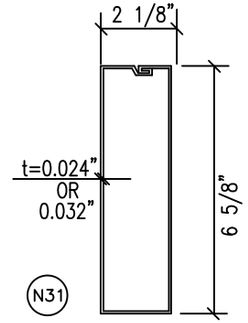

N31

RAFTER & SIDEPLATES
(3004-H36 ALUM. ALLOY)

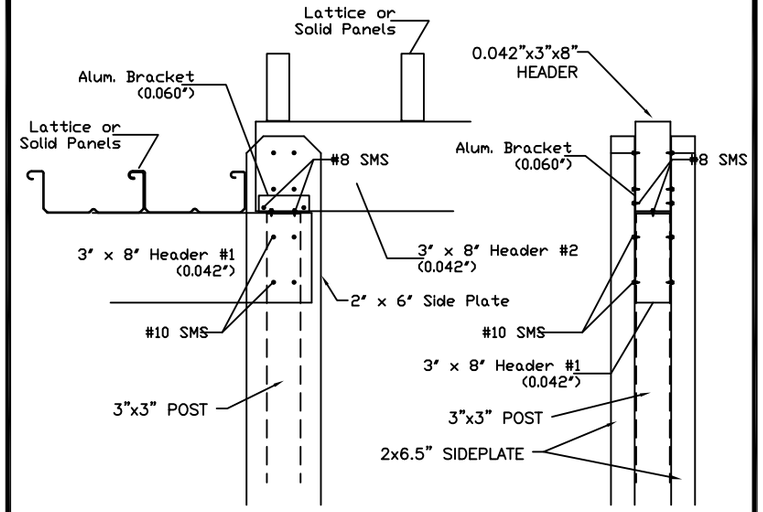

N32 ALTERNATIVE SPLICE FOR ATTACHED UNITS

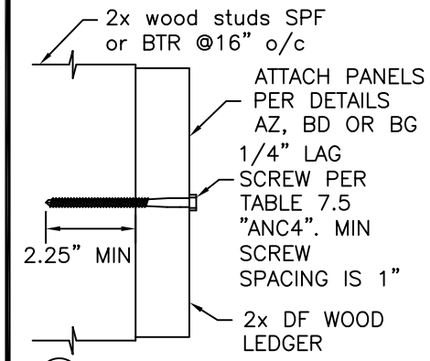

N34 LEDGER BOARD ATTACHMENT

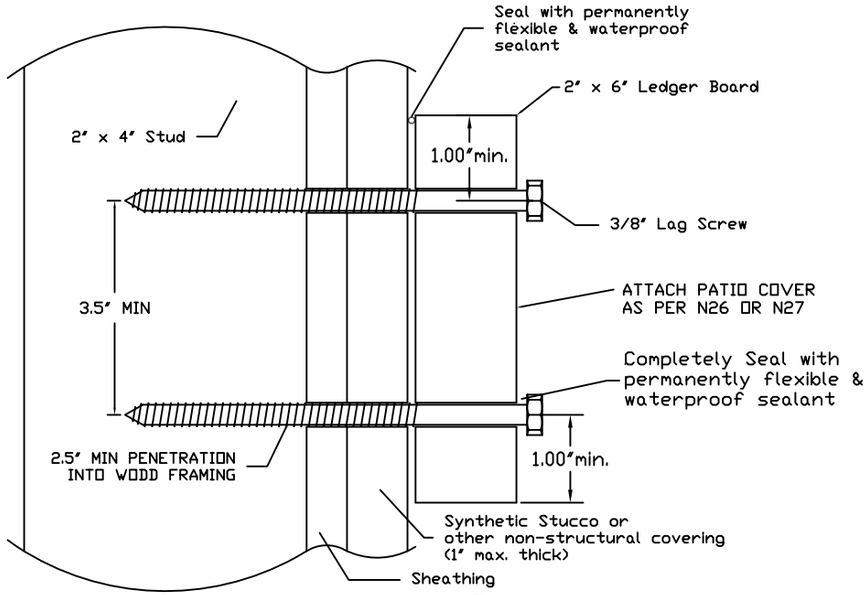

SEE ALLOWABLE DISTANCE TO FIRST ROW OF POSTS IN TABLE 7.7

N33 STUCCO ATTACHMENT DETAIL WITH LEDGER BOARD

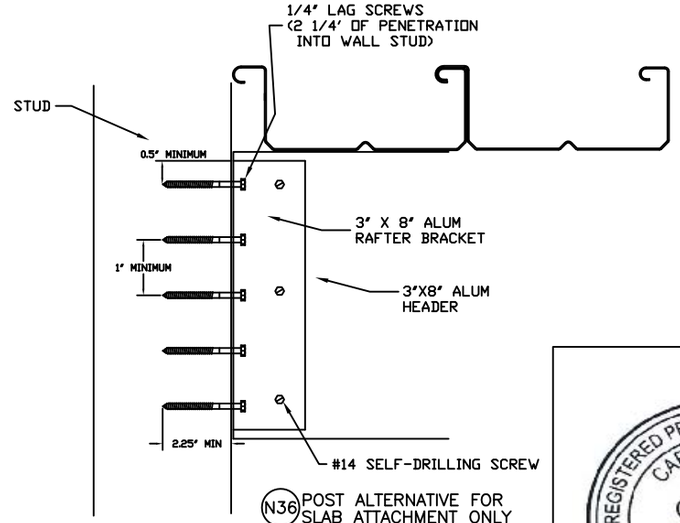

N36 POST ALTERNATIVE FOR SLAB ATTACHMENT ONLY

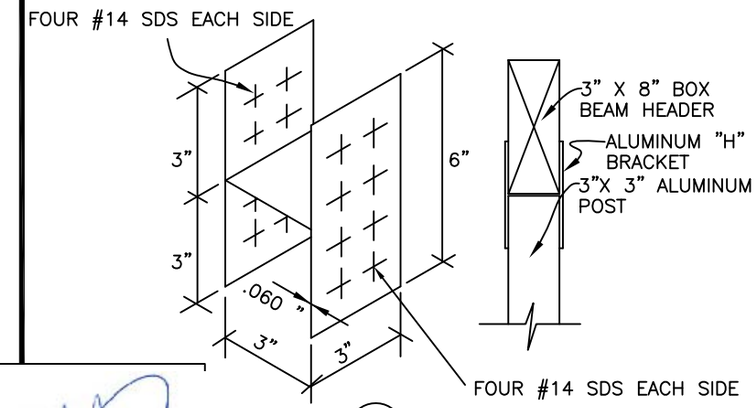

N35 ALUMINUM 'H' BRACKET FOR CONNECTING POST TO HEADER (6063-T6 ALUM. ALLOY)

REGISTERED PROFESSIONAL ENGINEER
CARL PUTNAM
C 68139
EXP. 6/30/2009
CIVIL
STATE OF CALIFORNIA

4/27/2009

Engineer's Stamp

Amerimax BUILDING PRODUCTS, INC.
5208 TENNYSON PARKWAY
SUITE 100
PLANO, TEXAS 75024

DRAWN BY: BEJ/CP	TYPE:	
SCALE: NTS	NAME: Component Parts & Connection Details for Newport Patio Structures	
DATE:	FILE#: NP04-2006	SHEET: 4 of 4

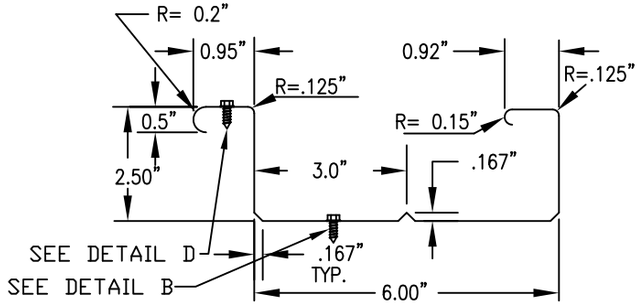

6" FLAT PAN

Ⓐ 6" STRUCTURAL PANEL (3004–H36 ALUM. ALLOY)

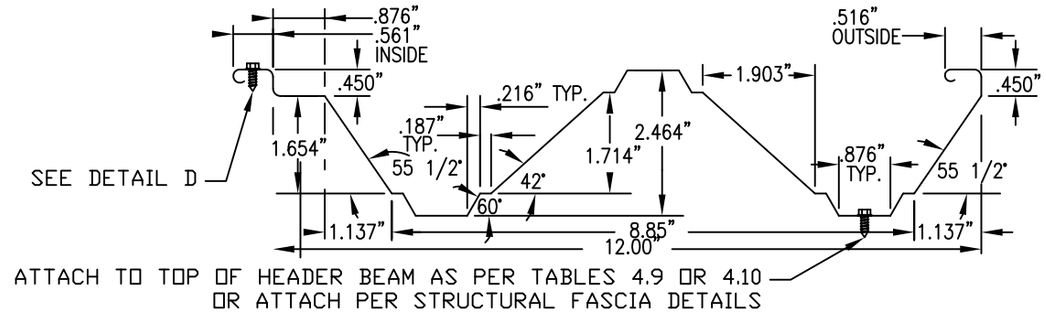

Ⓑ 12" STRUCTURAL PANEL (3004–H36 ALUM. ALLOY)

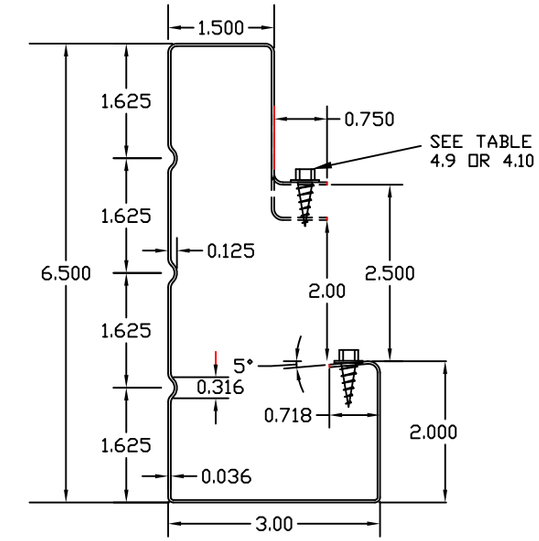

Ⓔ 6 1/2" ROLLFORMED FASCIA 3004H36 ALLOY

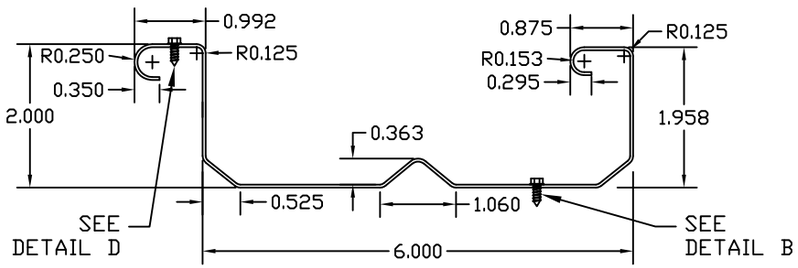

Ⓒ 2"x6" FLAT PANEL 3004H36 ALUMINUM

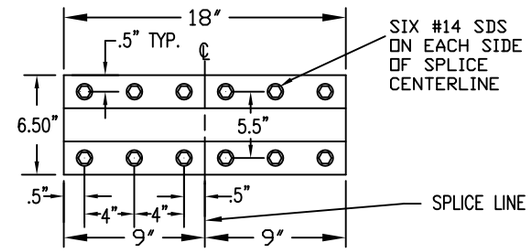

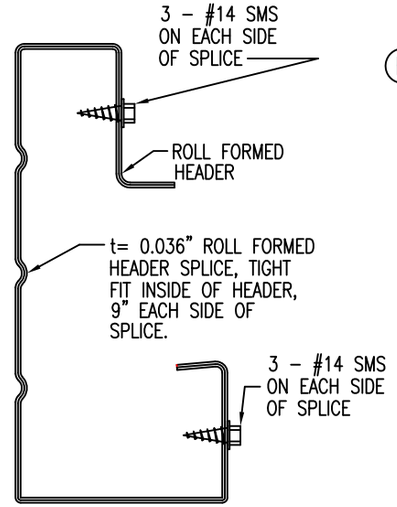

Ⓕ ROLLFORMED HEADER SPLICE (3004–H36 ALUM. ALLOY)

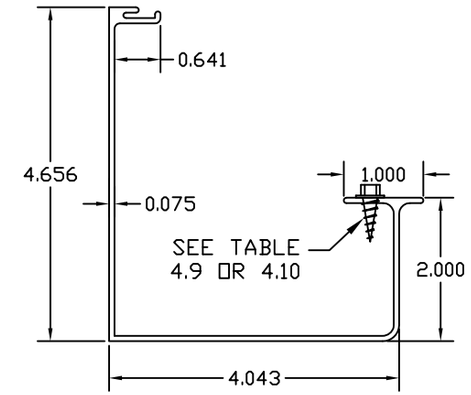

Ⓖ CALIFORNIA FASCIA (6063–T6 ALUM. ALLOY)

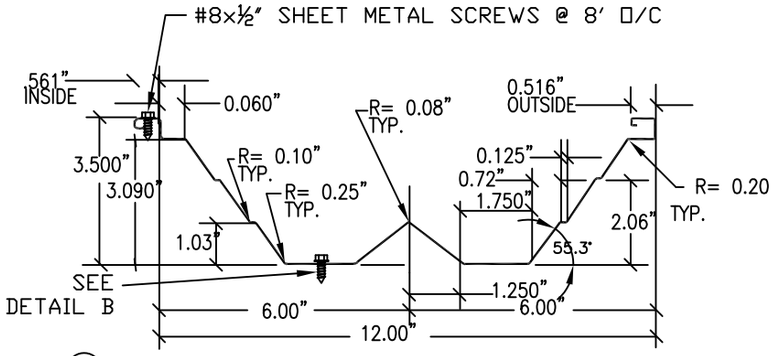

Ⓓ 3 1/2" X 12" STRUCTURAL PANEL (3004–H36 ALUM. ALLOY)

4/27/2009

Engineer's Stamp

Amerimax BUILDING PRODUCTS, INC.

5208 TENNYSON PARKWAY
SUITE 100
PLANO, TEXAS 75024

DRAWN BY: BEJ/CP	TYPE:	
SCALE: NTS	NAME: Component Parts & Connection Details	
DATE:	FILE#: CD01–2006	SHEET: 1 of 9

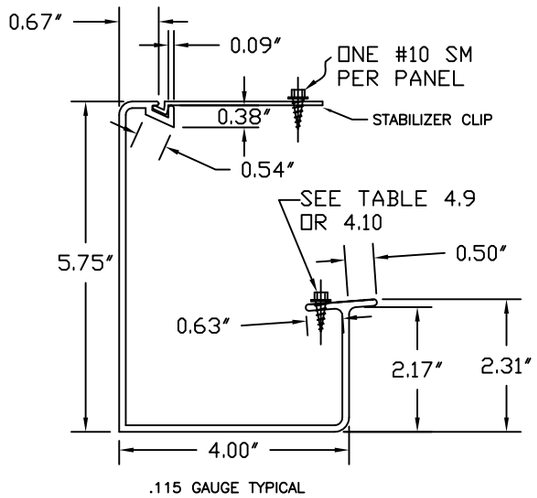

(H) CLASSIC FASCIA
W/ STABLIZER CLIP
(6061–T6 Alum. Alloy)

NOTE:
HEADER SPLICE MUST BE LOCATED WITHIN 12" OF A POST.

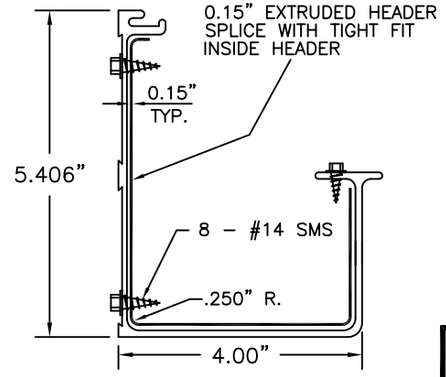

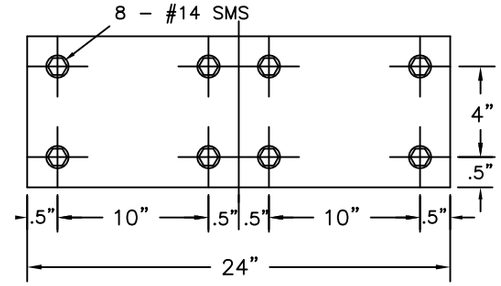

(I) ALASKAN HEADER SPLICE
(6061–T6 ALUM. ALLOY)

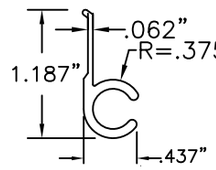

NOTE:
SEE DETAIL 'BB'
FOR EXTRUDED
HANGER W/ A–RAIL

(J) A–RAIL
(6063–T6 ALUM. ALLOY)

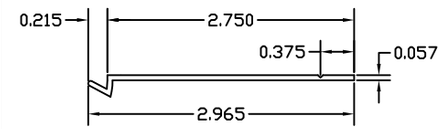

(M) STABILIZER CLIP FOR EXTRUDED
HEADERS 'H' & 'L'
(6063–T6 ALUM. ALLOY)

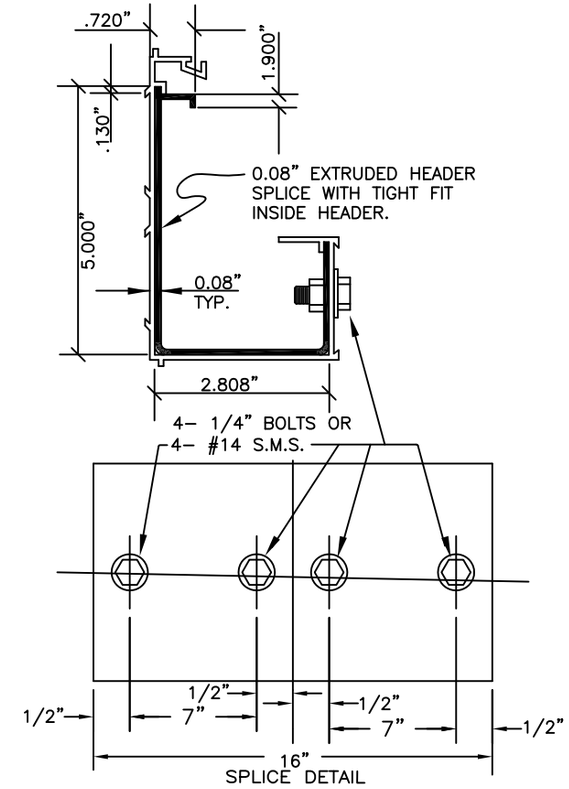

(N) 5 1/2" EXTRUDED HEADER SPLICE
(6061–T6 ALUM. ALLOY)

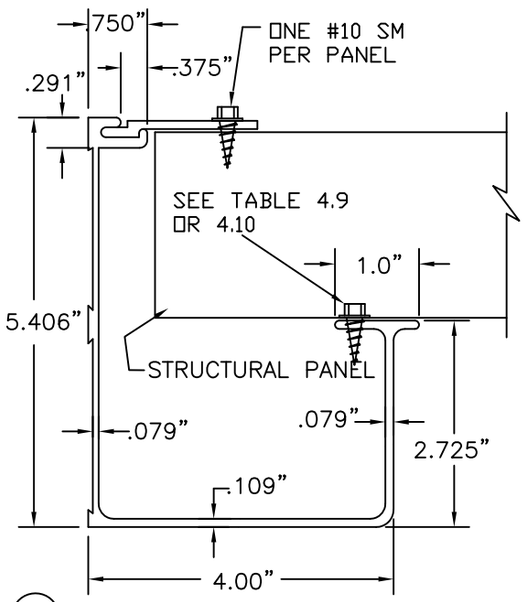

(K) ALASKAN HEADER
(6061-T6 ALUM. ALLOY)

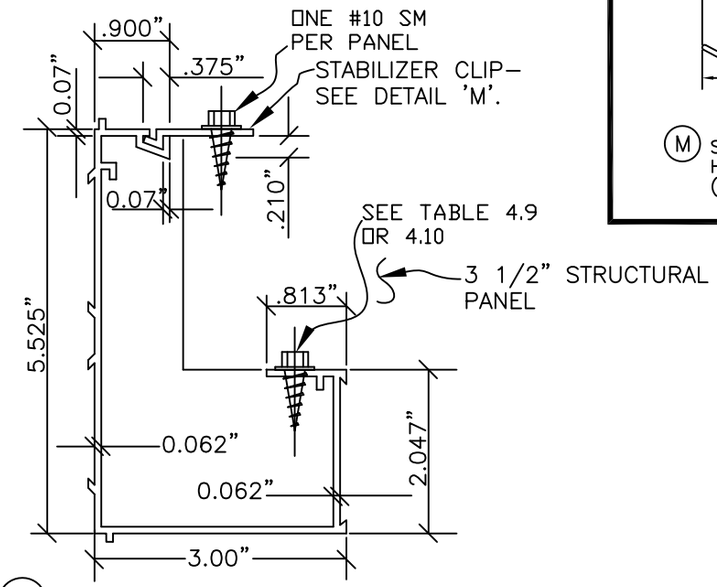

(L) 5 1/2" EXTRUDED HEADER
(6061-T6 ALUM. ALLOY)

4/27/2009
Engineer's Stamp

Amerimax BUILDING PRODUCTS, INC.
5208 TENNYSON PARKWAY
SUITE 100
PLANO TEXAS 75024

DRAWN BY: BEJ/CP	TYPE:	
SCALE: NTS	NAME: Component Parts & Connection Details	
DATE:	FILE#: CD02–2006	SHEET: 2 of 9

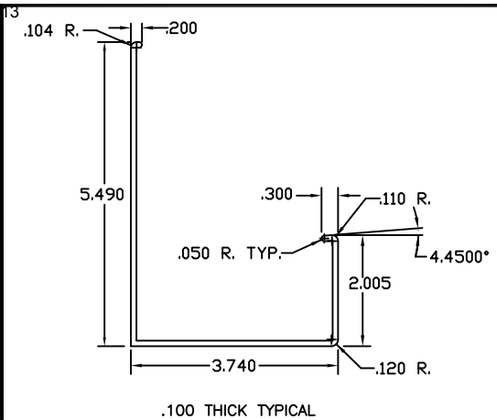

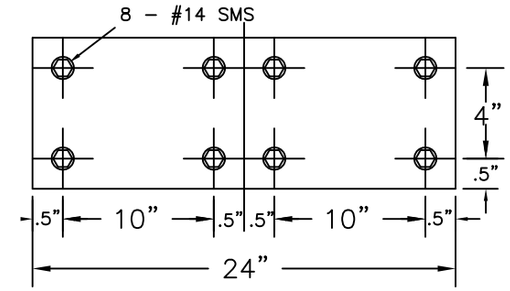

(P) CLASSIC ALASKAN HEADER SPLICE
(6061–T6 ALUM. ALLOY)

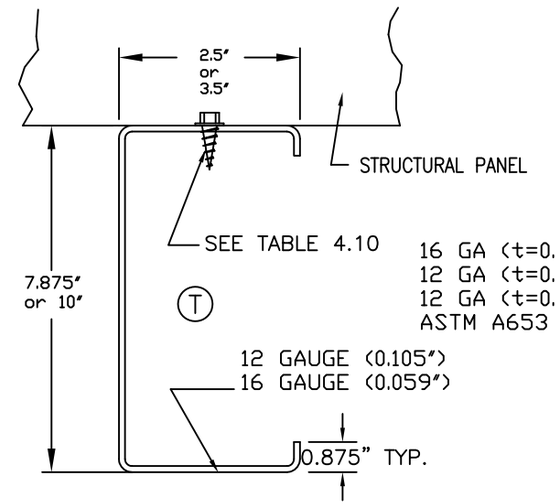

16 GA (t=0.059") 3"X8" STEEL HEADER
12 GA (t=0.105") 3"X8" STEEL HEADER
12 GA (t=0.105") 3.5"X10" STEEL HEADER
ASTM A653 GRADE 50

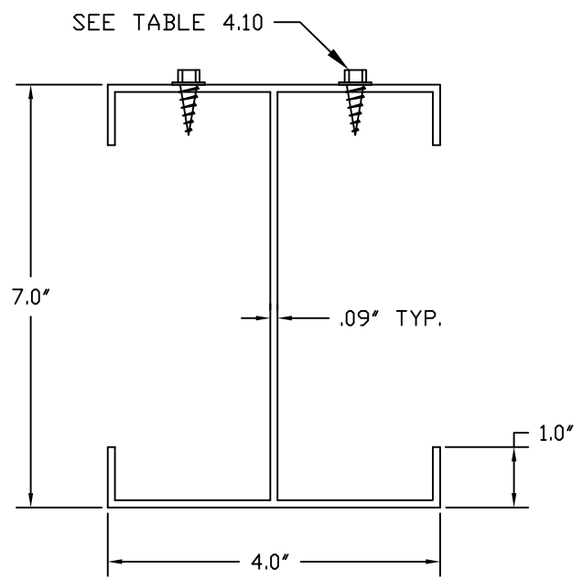

(Q) 7" x 4" I BEAM HEADER
(6061-T6 ALUM. ALLOY)

4/27/2009
Engineer's Stamp

Amerimax BUILDING PRODUCTS, INC.
5208 TENNYSON PARKWAY
SUITE 100
PLANO, TEXAS 75024

DRAWN BY: BEJ/CP	TYPE:	
SCALE: NTS	NAME: Component Parts & Connection Details	
DATE:	FILE#: CD03–2006	SHEET: 3 of 9

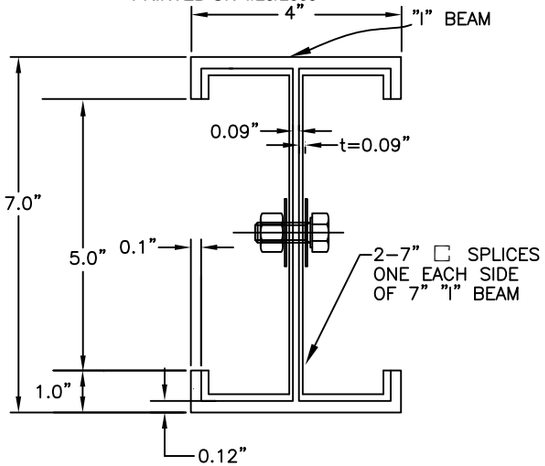

7" X 4" I-BEAM SPLICE
(6061-T6 ALUM. ALLOY)

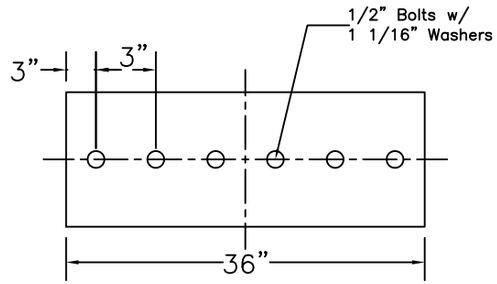

(U) 7" X 4" ALUM. I-BEAM FULL STRENGTH SPLICE BOLT LAYOUT

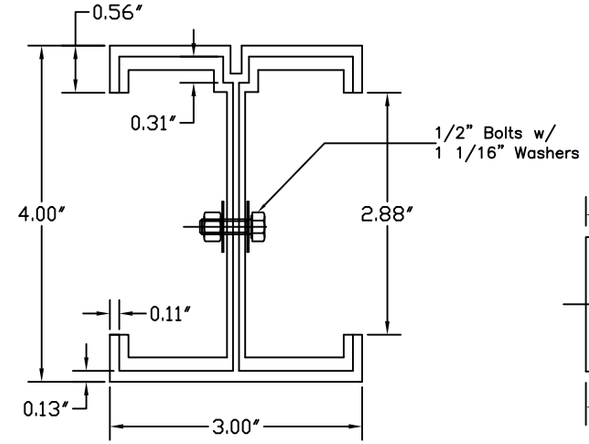

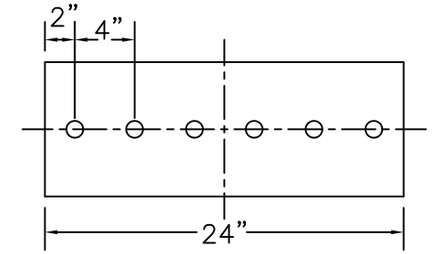

(X) 4" X 3" ALUM. I-BEAM FULL STRENGTH SPLICE BOLT LAYOUT

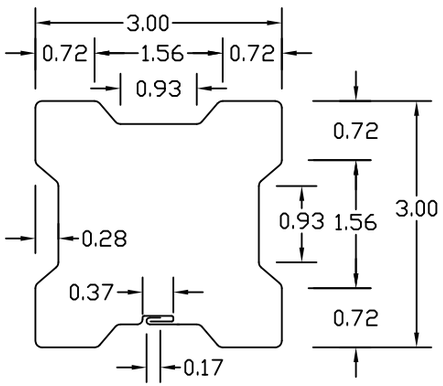

t = 0.041"

(W) 3" X 3" CLOVERLEAF HEADER
(A-653 Fy=40 KSI STEEL)

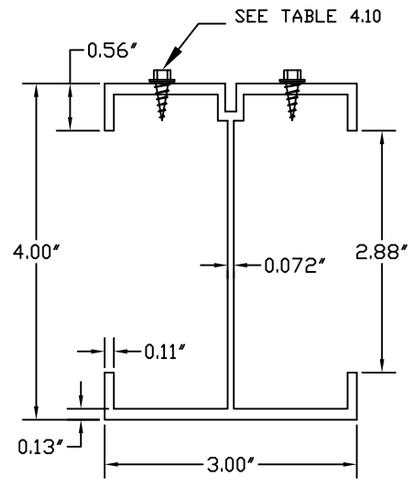

(Y) 4" X 3" ALUM. I-BEAM

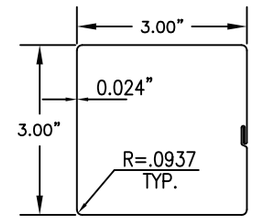

(Z) 3" SQUARE POST
(3105-H26 ALUM. ALLOY)

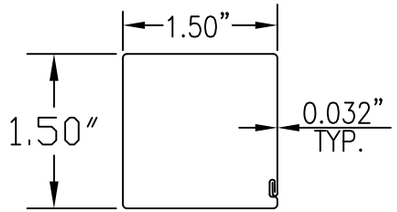

(AA) 1 1/2" SQUARE POST
(3105-H26 ALUM. ALLOY)

4/27/2009
Engineer's Stamp

Amerimax BUILDING PRODUCTS, INC.
5208 TENNYSON PARKWAY
SUITE 100
PLANO, TEXAS 75024

DRAWN BY: BEJ/CP	TYPE:	
SCALE: NTS	NAME: Component Parts & Connection Details	
DATE:	FILE#: CD04-2006	SHEET: 4 of 9

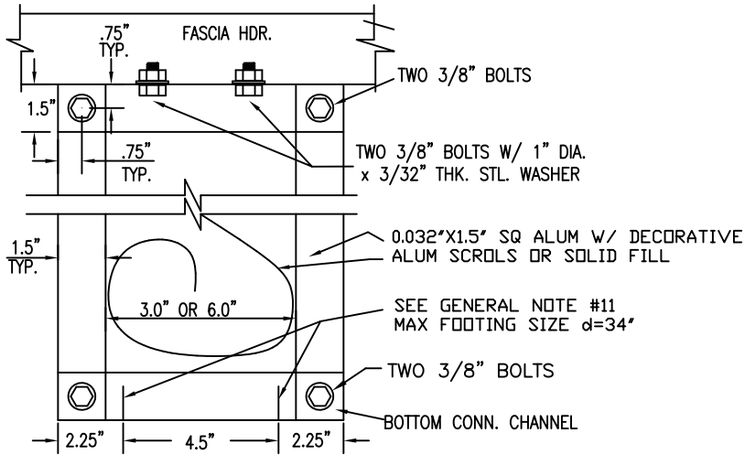

(AC) ROLL FORMED SCROLL POST CONNECTION TO CONCRETE SLAB OR FOOTING
BRACKET = 6063 T6 ALUM ALLOY
POST = DETAIL AA OR AF
ONLY USABLE FOR SINGLE SPAN ATTACHED UNITS

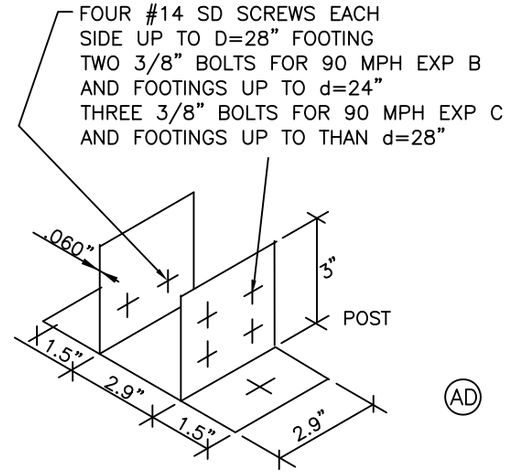

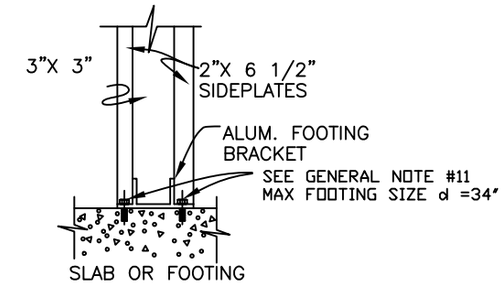

(AD) ALUMINUM FOOTING BRACKET FOR CONNECTING TO CONCRETE SLAB OR FOOTING
6063 T6 ALUM ALLOY
ONLY USABLE FOR SINGLE SPAN ATTACHED UNITS

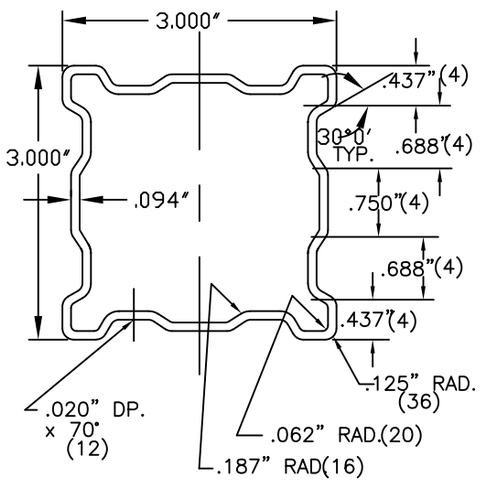

(AE) COLONIAL POSTS
(3" ALUM. 6063-T6)
"t" = 0.062" UNLESS OTHERWISE NOTED

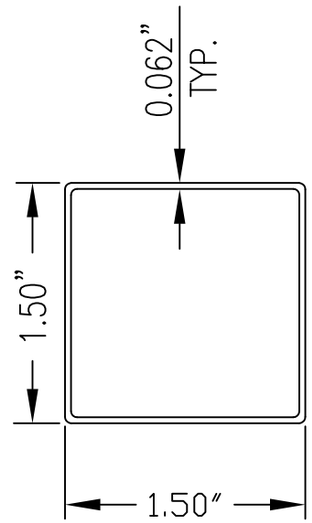

(AF) TWIN 1.5" SQ. X .062"
EXTRUDED POST
(ALUM. 6063-T6)

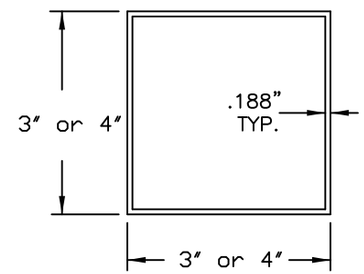

(AG) 3" or 4" ASTM A500
GRADE A STEEL POST

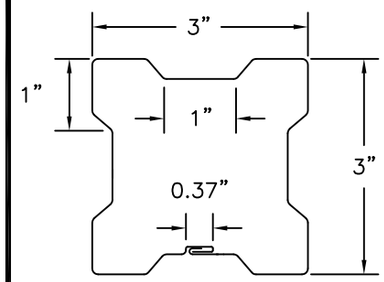

t (IN)= 0.032, 0.040 (ALUM)
= 0.041 (STEEL)

NOTE:
POSTS MAY BE TRIMMED w/FLEX ALUM. FACING.

(AH) 3" ALTERNATE POST
(3004-H36 ALUM. ALLOY OR
A-653 Fy=40 KSI STEEL)

4/27/2009
Engineer's Stamp

Amerimax BUILDING PRODUCTS, INC.
5208 TENNYSON PARKWAY
SUITE 100
PLANO, TEXAS 75024

DRAWN BY: BEJ/CP	TYPE:	
SCALE: NTS	NAME: Component Parts & Connection Details	
DATE:	FILE#: CD05-2006	SHEET: 5 of 9

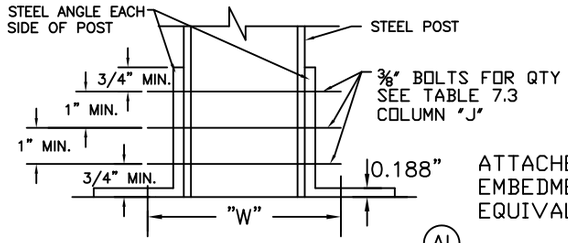

ATTACHED STRUCTURE POST TO FOOTING USING 3/8" W/ 2" EMBEDMENT STAINLESS STEEL HILT KWIK BOLT TZ OR EQUIVALENT. MAX FOOTING SIZE d = 34"

(AI)

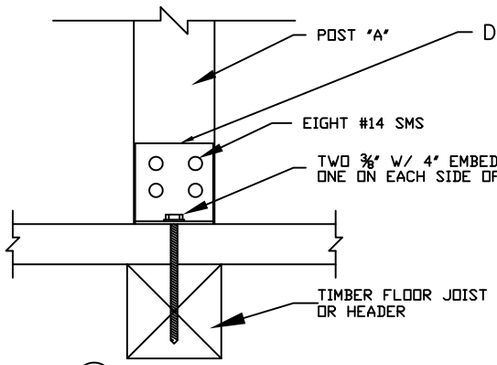

(AL) ATTACHED STRUCTURE POST TO FLOOR JOIST

THESE DETAILS ARE LIMITED TO 90 mph EXPOSURE B AND C

SEE NOTE 19

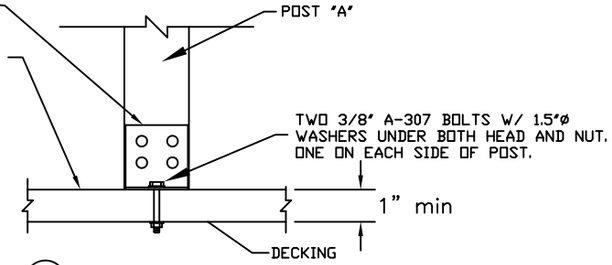

(AM) ATTACHED STRUCTURE POST TO DECKING

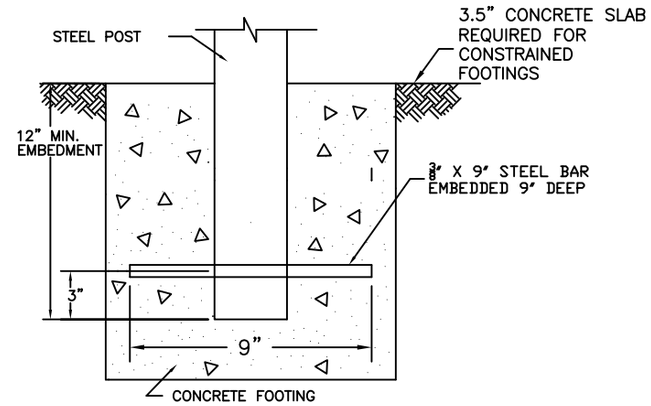

NOTE:

(AQ) FREESTANDING OR ATTACHED STRUCTURE COLUMN TO FOOTING CONNECTION DETAIL

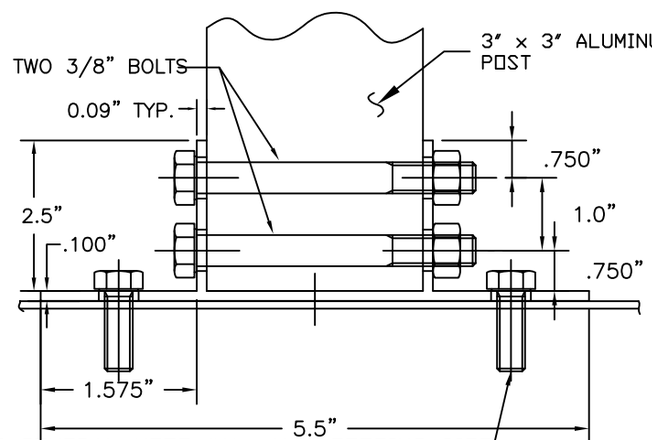

SEE GENERAL NOTE #11. MAX FOOTING SIZE IS d= 34"

(AP) POST TO FOOTING OR SLAB ATTACHMENT DETAIL SINGLE SPAN ATTACHED UNITS ONLY

4/27/2009

Engineer's Stamp

Amerimax BUILDING PRODUCTS, INC.

5208 TENNYSON PARKWAY
SUITE 100
PLANO, TEXAS 75024

DRAWN BY: BEJ/CP	TYPE:	
SCALE: NTS	NAME: Component Parts & Connection Details	
DATE:	FILE#: CD06-2006	SHEET: 6 of 9

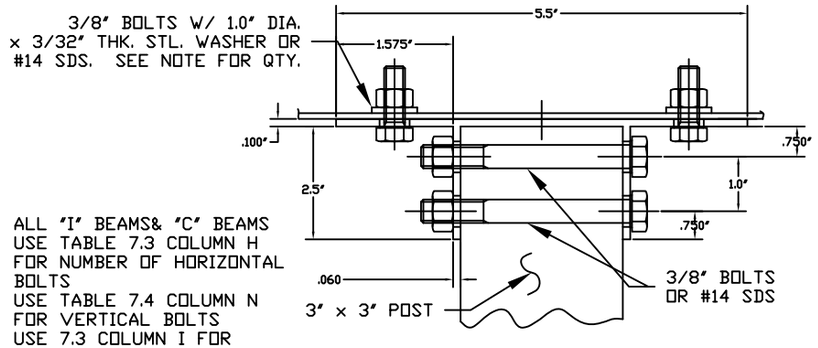

(AR) ALTERNATE 3" SQ. POST CONNECTOR BRACKET (6063–T6 ALUM. ALLOY)

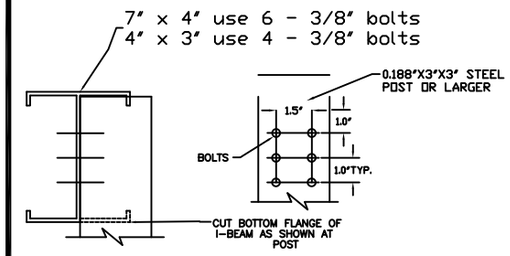

(AS) ALTERNATE – I BEAM TO POST CONECTION

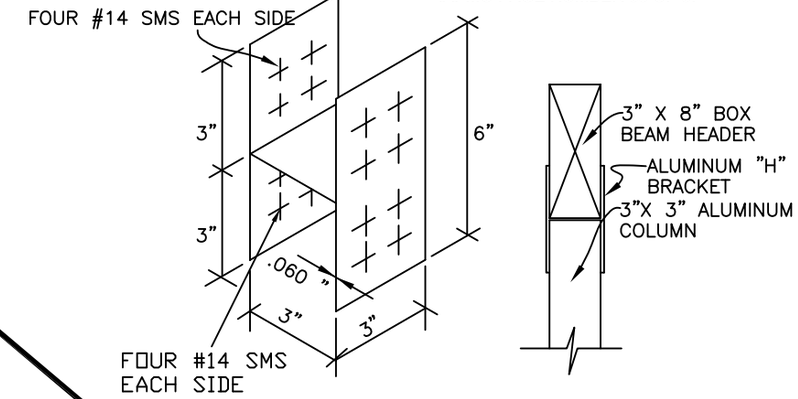

(AU) ALUMINUM 'H' BRACKET FOR CONNECTING COLUMN TO HEADER (6063–T6 ALUM. ALLOY)

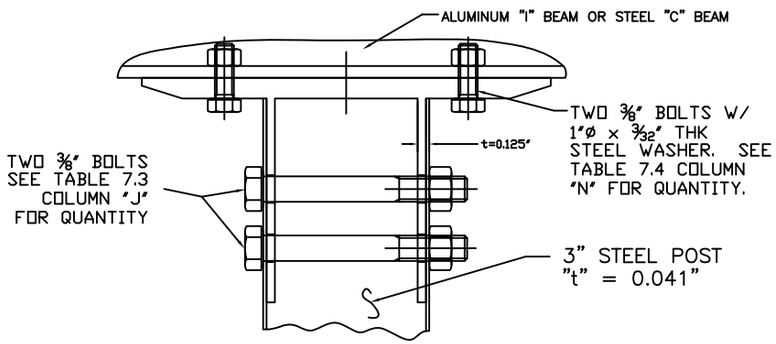

(AT) 3" STEEL POST TO HEADER CONN. BRACKET (6063–T6 ALUM.)

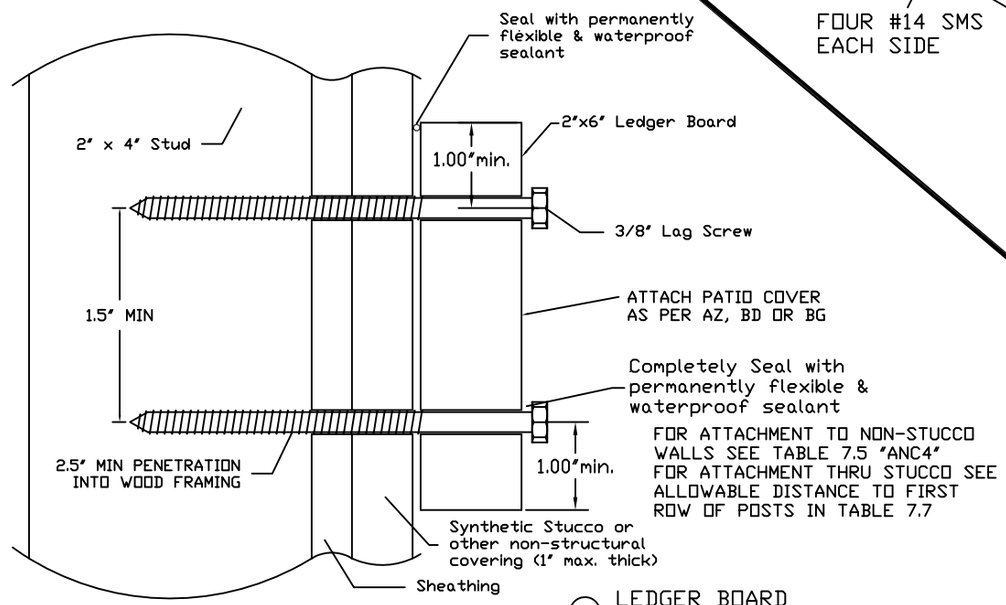

(AV) LEDGER BOARD ATTACHMENT DETAIL

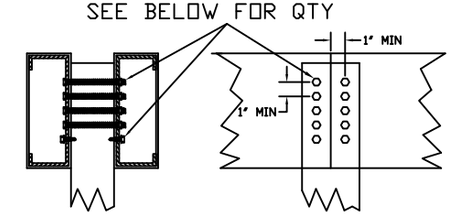

(AY) DOUBLE OR SINGLE 3"X8" STEEL C BEAM. BOLT LAYOUT FOR SPLICED AND NON-SPLICE ATTACHMENT

UP TO 25 PSF USE 4 BOLTS
30 PSF USE 6 BOLTS OR 12 #14 SCREWS
40+ PSF USE 10 BOLTS

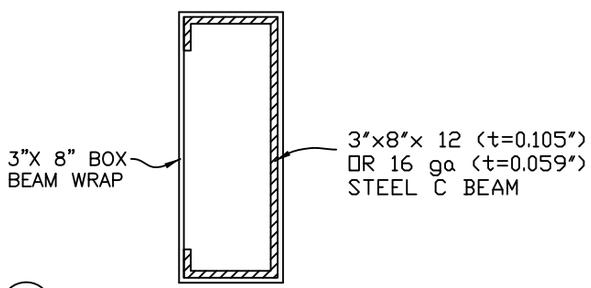

(AW) 3" X 8" STL. 'C' BEAM WRAP W/ 3" X 8" ALUM. BOX BEAM

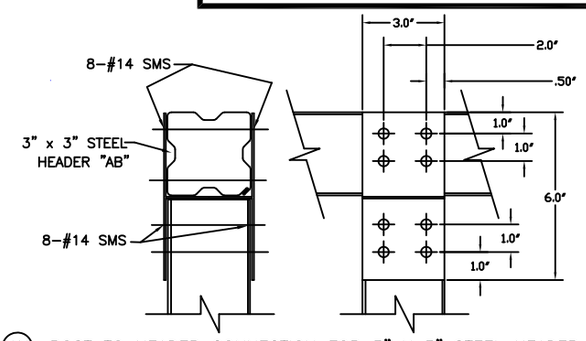

(AX) POST TO HEADER CONNECTION FOR 3" X 3" STEEL HEADER "AB"

4/27/2009
Engineer's Stamp

Amerimax BUILDING PRODUCTS, INC.
5208 TENNYSON PARKWAY
SUITE 100
PLANO, TX 75024

DRAWN BY: BEJ/CP	TYPE:	
SCALE: NTS	NAME: Component Parts & Connection Details	
DATE:	FILE#: CD07–2006	SHEET: 7 of 9

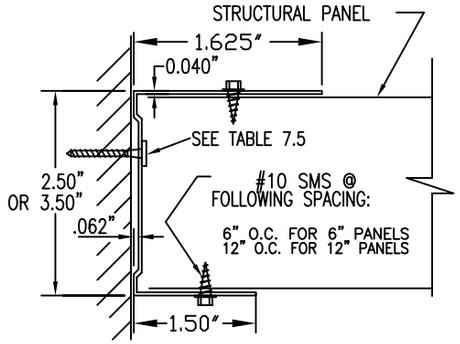

SEE TABLE 7.5 NOTE #6 FOR END FASTENING REQUIREMENTS

(AZ) ROLLFORMED HANGER (3004–H36 ALUM. ALLOY)

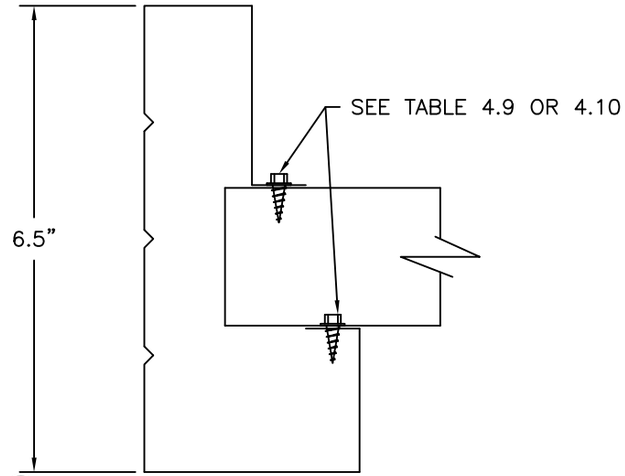

(BE) ROLLFORMED HEADER 'E' CONN. DETAILS TO STRUCTURAL PANELS

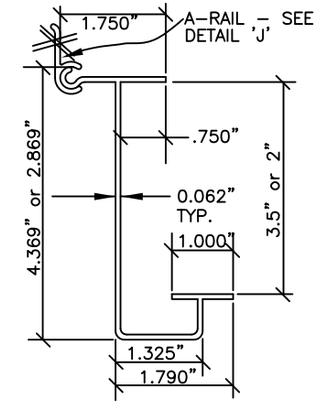

(BB) 3 1/2" "J" HANGER (6063–T6 ALUM. ALLOY)

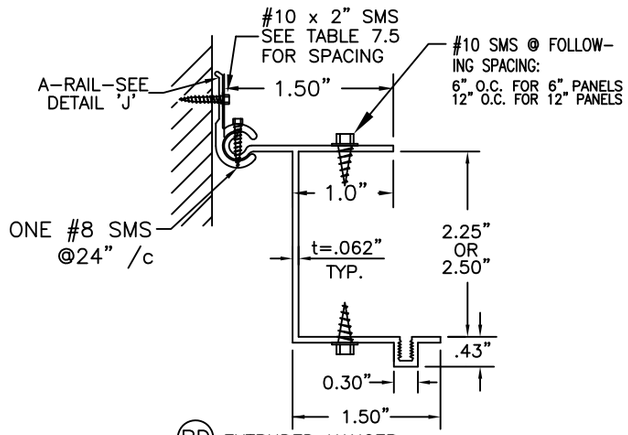

(BD) EXTRUDED HANGER (6063–T6 ALUM. ALLOY)

SEE TABLE 7.5 NOTE #6 FOR END FASTENING REQUIREMENTS

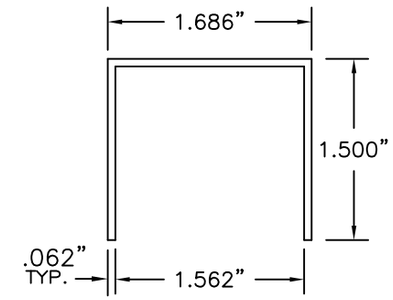

(BH) EXTRUDED CHANNEL CONNECTOR (6063–T6 ALUM. ALLOY)

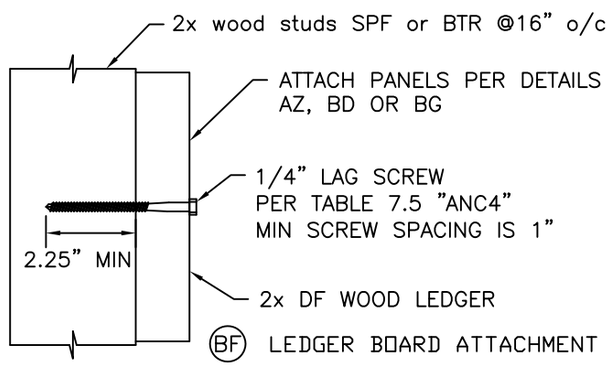

(BF) LEDGER BOARD ATTACHMENT

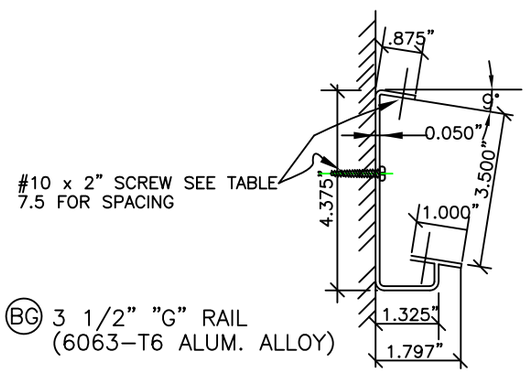

(BG) 3 1/2" "G" RAIL (6063–T6 ALUM. ALLOY)

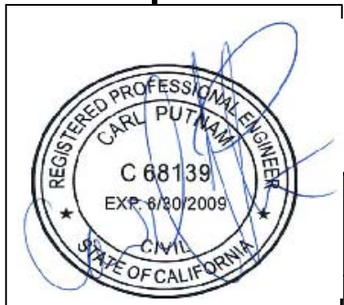

4/27/2009
Engineer's Stamp

Amerimax BUILDING PRODUCTS, INC.
5208 TENNYSON PARKWAY
SUITE 100
PLANO, TEXAS 75024

DRAWN BY: BEJ/CP	TYPE:	
SCALE: NTS	NAME: Component Parts & Connection Details	
DATE:	FILE#: CD08–2006	SHEET: 8 of 9

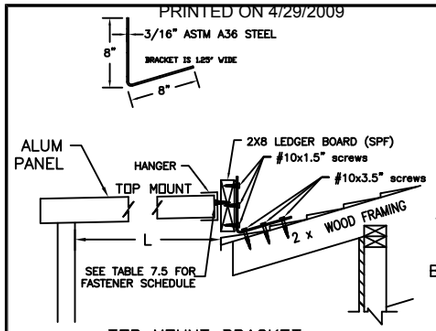

TOP MOUNT BRACKET

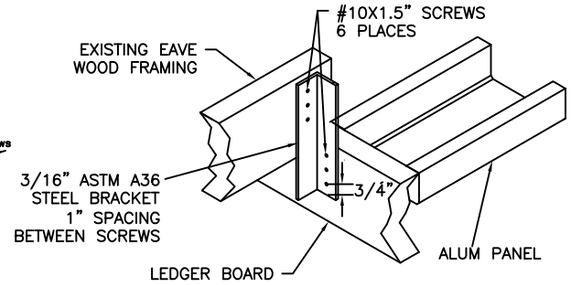

SIDE MOUNT BRACKET

MAX "L" FOR TOP OR SIDE MOUNT		
Live		
Load (psf)	16" o/c	24"o/c
10	17'-11"	11'-11"
20	9'-4"	6'-3"

ALL HOUSE PENETRATIONS MUST BE COMPLETELY AND PERMANENTLY SEALED
NOT ALLOWED IN SNOW LOAD AREAS
MAX WIND SPEED IS 110 MPH EXP C

EAVE OVERHANG AND "L" MUST COMPLY WITH DETAIL BN ALSO

(BI) ALTERNATE EAVE ATTACHMENTS

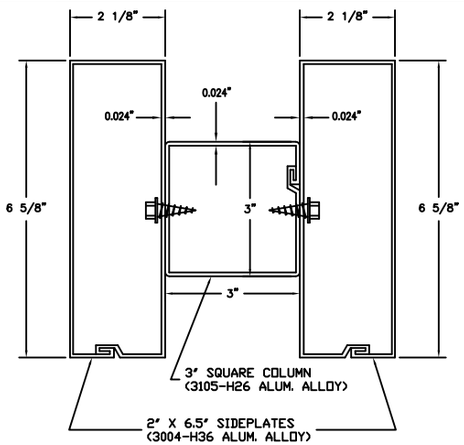

(BK)

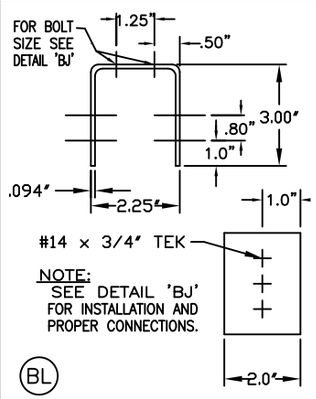

(BL)

3" ALTERNATE POST CONN. BRACKETS (STEEL A-653 Fy=40,000 PSI)

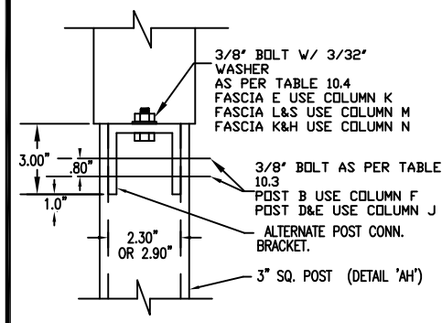

(BJ) 3" POST CONNECTIONS FOR FASCIA HEADERS

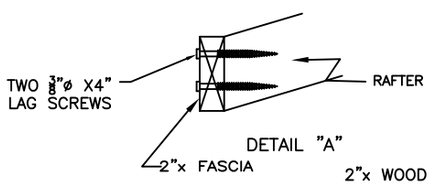

DETAIL "A"

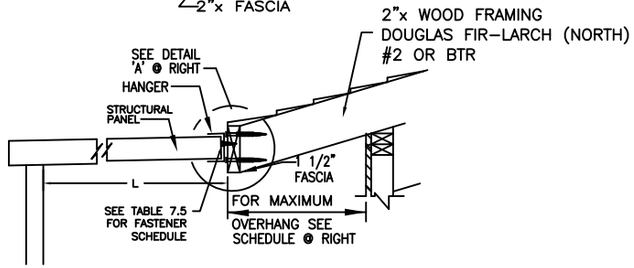

(BN) ALTERNATE EAVE ATTACHMENT

Live/Snow Load Solid Cover Wind	RAFTER SIZE (24" O/C)	MAX DISTANCE TO FIRST ROW OF POSTS "L" EAVE OVERHANG 12"	18"	24"	30"	36"
10 psf 90 MPH Exp B	2x4	15'-8"	8'-11"	5'-6"	2'-6"	0'-2"
	2x6	22'-0'	22'-0'	17'-4"	13'-8"	9'-6"
	2x8	22'-0'	22'-0'	22'-0'	22'-0'	22'-0'
10 psf 90 MPH Exp C	2x4	11'-2"	6'-7"	4'-1"	2'-4"	0'-2"
	2x6	22'-0'	22'-0'	15'-1"	10'-1"	7'-2"
	2x8	22'-0'	22'-0'	22'-0'	22'-0'	22'-0'
20 psf 105 MPH Exp B	2x4	8'-6"	4'-9"	2'-8"	1'-3"	0'-1"
	2x6	12'-4'	12'-4'	9'-8"	6'-10"	4'-9"
	2x8	12'-4'	12'-4'	12'-4'	12'-4'	11'-6"
25 psf 105 MPH Exp C	2x4	6'-9"	3'-9"	2'-1"	0'-10"	0'-0"
	2x6	13'-7'	11'-3"	7'-8"	5'-4"	3'-8"
	2x8	13'-7'	13'-7'	13'-7'	11'-10"	9'-1"
30 psf 110 MPH Exp C	2x4	5'-6"	3'-0"	1'-6"	0'-4"	0'-0"
	2x6	11'-1"	9'-2"	6'-1"	4'-1"	2'-8"
	2x8	11'-4'	11'-4'	11'-4'	9'-6"	7'-1"
40 psf	2x4	3'-10"	1'-10"	0'-8"	0'-0"	0'-0"
	2x6	7'-10"	6'-7"	4'-2"	2'-7"	1'-4"
	2x8	8'-4'	8'-4'	8'-4'	6'-7"	4'-8"
60 psf	2x4	2'-3"	0'-10"	0'-0"	0'-0"	0'-0"
	2x6	4'-8"	3'-10"	2'-2"	1'-0"	0'-1"
	2x8	5'-9'	5'-9'	5'-3"	3'-8"	5'-9'

4/27/2009

Engineer's Stamp

Amerimax BUILDING PRODUCTS, INC.
5208 TENNYSON PARKWAY
SUITE 100
PLANO, TEXAS 75024

DRAWN BY: BEJ/CP	TYPE:	
SCALE: NTS	NAME: Component Parts & Connection Details	
DATE:	FILE#: CD09-2006	SHEET: 9 of 9

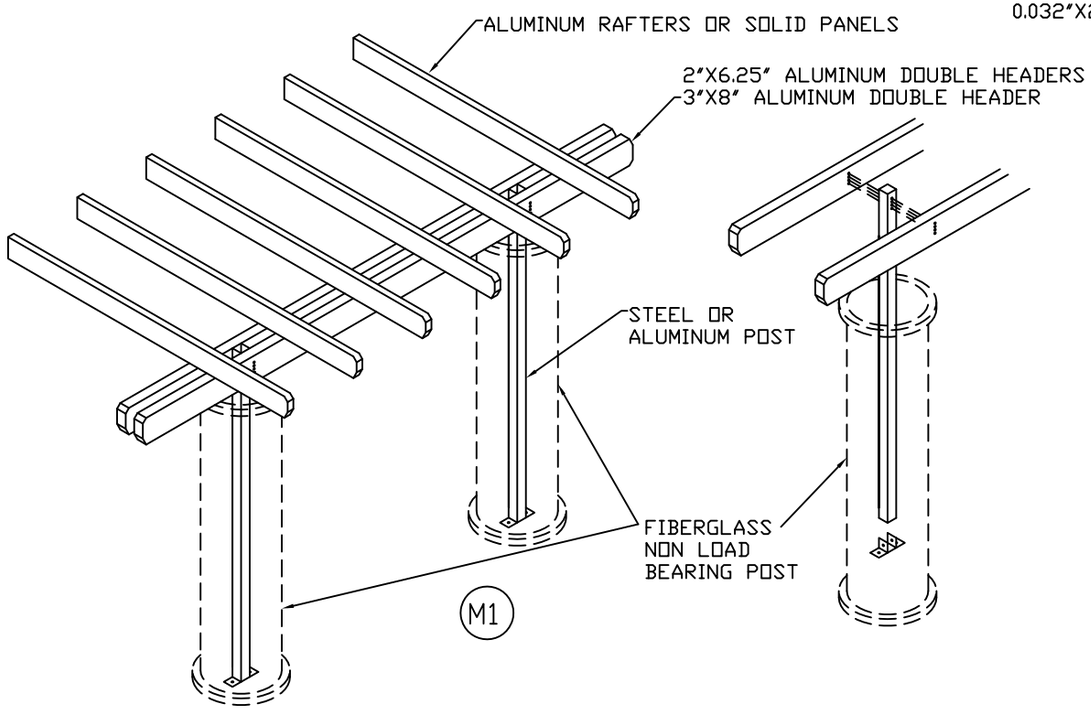

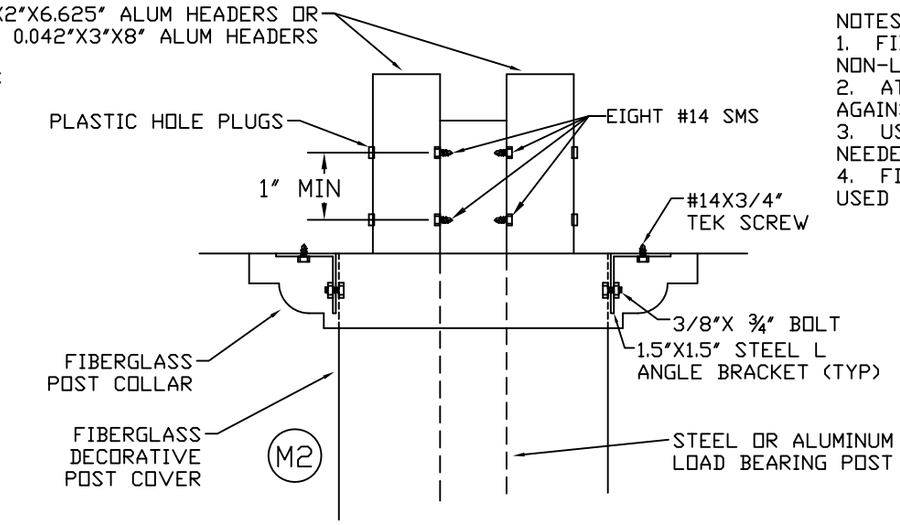

NOTES:
1. FIBERGLASS POSTS ARE NON-LOAD BEARING.
2. ATTACHMENT TO HOLD COVERING AGAINST MINOR LATERAL FORCES.
3. USE MULTIPLE BRACKETS AS NEEDED.
4. FIBERGLASS POSTS MAY BE USED FOR ANY STRUCTURE.

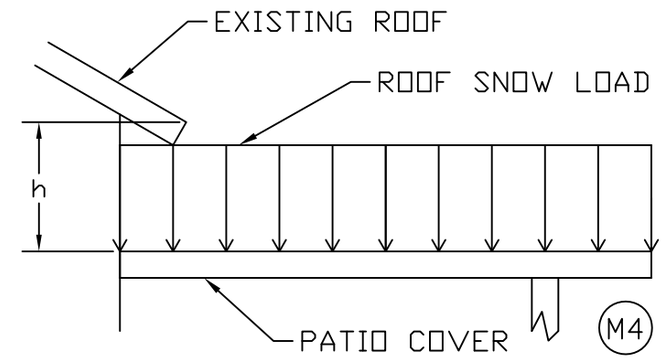

STRUCTURES COMPLYING WITH THIS DETAIL DO NOT REQUIRE ADDITIONAL DRIFTING SNOW CONSIDERATIONS

GROUND SNOW LOAD (PSF)	MAXIMUM "h" (IN)
10	9
15	14
20	17
25	18
30	20
40	25
50	30
60	33

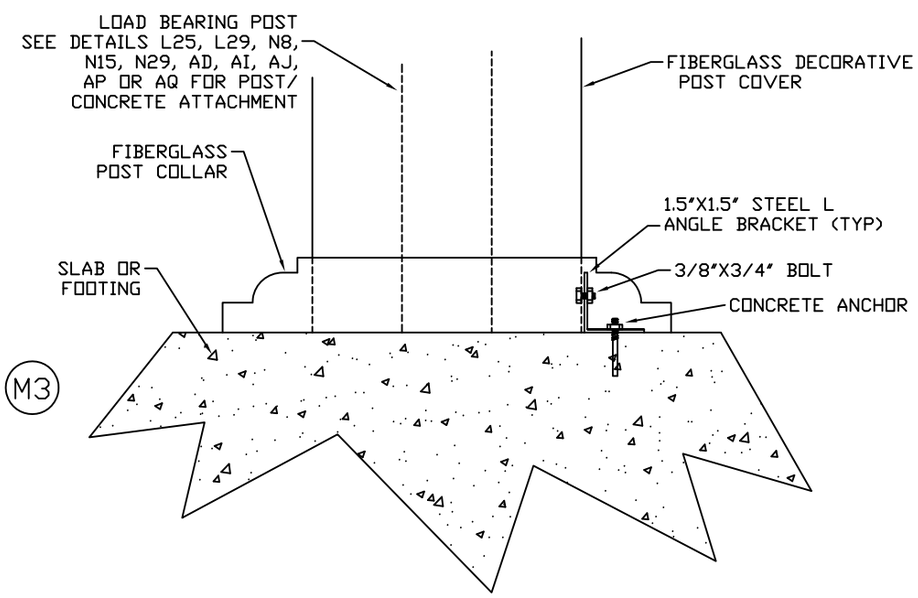

4/27/2009
Engineer's Stamp

Amerimax BUILDING PRODUCTS, INC.
5208 TENNYSON PARKWAY
SUITE 100
PLANO, TEXAS 75024

DRAWN BY: CP	TYPE:	
SCALE: NTS	NAME: Miscellaneous Details	
DATE:	FILE#: M1-2006	SHEET:

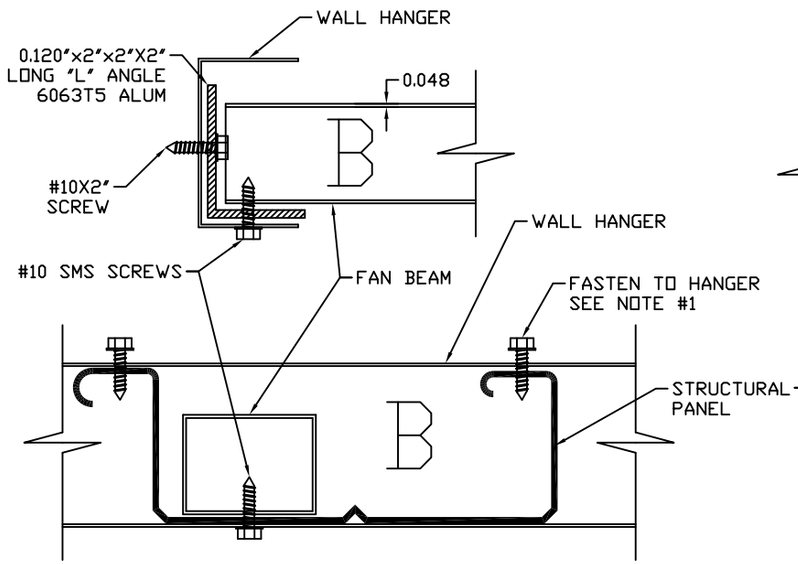

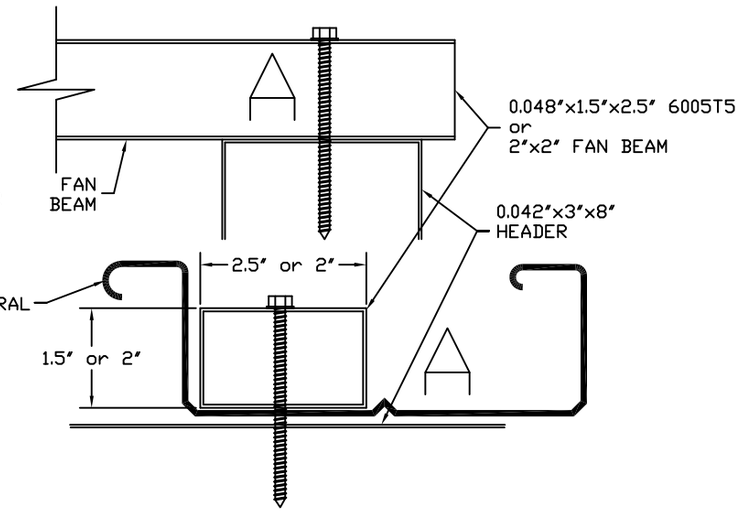

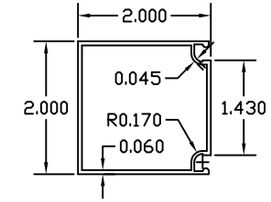

2"X2" FAN BEAM 6063T5 ALUM
NO ORIENTATION SPECIFIED

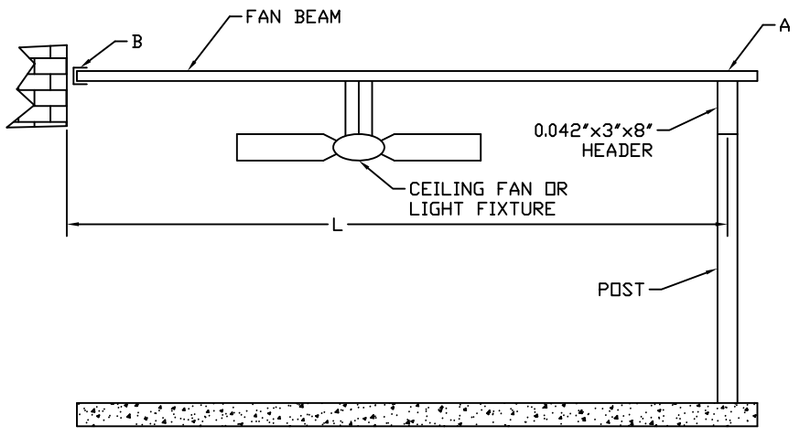

CONFORMANCE TO THE APPLICABLE ELECTRICAL CODE IS OUTSIDE THE SCOPE OF THIS DETAIL AND MUST BE APPROVED SEPERATELY.

10 PSF LIVE LOAD / 90 MPH EXPOSURE C

TRIB WIDTH (FT)	MAX POST SPACING ON SLAB (FT)	POST REQ'D FOR SLAB	MAX POST SPACING (FT)	MIN POST TYPE	ATTACHED FOOTING SIZE "d" (in)
4	14'-8"	A	14'-8"	A	19
4.5	13'-10"	A	13'-10"	A	19
5	13'-2"	A	13'-2"	A	19
5.5	12'-4"	A	12'-7"	B	20
6	11'-4"	A	12'-0"	B	20
6.5	10'-5"	A	11'-7"	B	20
7	9'-8"	A	11'-2"	B	20
7.5	9'-1"	A	10'-9"	B	21
8	8'-6"	A	10'-5"	B	21
9	7'-6"	A	8'-7"	B	21
10	6'-9"	A	8'-2"	B	22
11	6'-2"	A	7'-9"	B	22
12	5'-8"	A	7'-1"	B	22
13	5'-2"	A	6'-7"	B	22
14	4'-10"	A	6'-1"	B	22
15	4'-6"	A	5'-8"	B	22
16	4'-3"	A	5'-4"	B	22
17	4'-0"	A	5'-0"	B	22

Weight of fan/lights	Allowable Spans 0.048"x1.5"x2.5"	Allowable Spans 2"x2" FAN BEAM
30 lbs	15'-9"	23'-0"
40 lbs	11'-10"	19'-11"
50 lbs	9'-5"	17'-10"
60 lbs	7'-10"	15'-1"
75 lbs	6'-3"	12'-1"

4/27/2009

Engineer's Stamp

Amerimax BUILDING PRODUCTS, INC.
5208 TENNYSON PARKWAY
SUITE 100
PLANO, TEXAS 75024

DRAWN BY: CP	TYPE:	
SCALE: NTS	NAME: Miscellaneous Details	
DATE:	FILE#: M2–2006	SHEET:

7.0 POST AND FASTENER REQUIREMENTS FOR COMMERCIAL AND PATIO STRUCTURES

Trib Width (ft)	Allowable Width for Attached Two Post Strructures on Slab — Live or Ground Snow Load 10 psf	20 psf
4	32'-1"	16'-11"
4.5	28'-6"	15'-1"
5	25'-8"	13'-6"
5.5	23'-4"	12'-4"
6	21'-5"	11'-3"
6.5	19'-9"	10'-5"
7	18'-4"	n/a
7.5	17'-1"	n/a
8	16'-0"	n/a
8.5	15'-1"	n/a
9	14'-3"	n/a

Table 7.1

POST TYPE	POST DESCRIPTIONS	DETAIL	MAX POST HGHT
A	Twin 0.032"x1.5"x1.5"	AC, AA	8'
A	Twin 0.062"x1.5"x1.5"	AC, AF	12'
A	0.024"Post with Sideplates	L24, N16, BK	12'
B	Clover 0.032"x3"x3" Alum	L11, N11, AH	10'
B	Clover 0.040"x3"x3" Alum	L11, N11, AH	12'
C	Colonial 0.062" Extruded	AE	12'
D	0.041"x3"x3" Steel Clover	L11, N11, AH	12'
E	0.041"x3"x3" Steel Clover	L11, N11, AH	12'
F	3/16"x3"x3" Steel Square	L21, N17, AG	15'
G	3/16"x4"x4" Steel Square	L21, N17, AG	18'
H	5/16"x4"x4" Steel Square	L21, N17, AG	18'

Table 7.2

Table7.3: Required Number of Fasteners for Shearing Loads — Table 7.4: Required Number of Fasteners for Tension Loads

	Footer Size d (in)	Design Uplift (lbs)	Aluminum Material Gage (in) 0.024	0.024	0.032	0.036	0.040	0.040	0.060	0.060	Steel Gage (in) 0.041	0.041	Aluminum Gage (in) 0.036	0.062	0.060	0.090	0.100	Design Uplift (lbs)	Footer Size d (in)
			A	B	C	D	E	F	G	H	I	J	K	L	M	N	O		
			#14 SMS	3/8" B BOLT	3/8" B BOLT	#14 SMS	#14 SMS	3/8" B BOLT	#14 SMS	3/8" B BOLT	#14 SMS	3/8" B BOLT	3/8" B BOLT	#14 SMS	3/8" B BOLT	3/8" B BOLT	#14 SMS		
			164	424	836	245	273	1046	293	1384	507	1691	588	382	865	1298	701		
	12	100	1	1	1	1	1	1	1	1	1	1	1	1	1	1	1	100	12
	13	127	1	1	1	1	1	1	1	1	1	1	1	1	1	1	1	127	13
	14	159	1	1	1	1	1	1	1	1	1	1	1	1	1	1	1	159	14
	15	195	2	1	1	1	1	1	1	1	1	1	1	1	1	1	1	195	15
	16	237	2	1	1	1	1	1	1	1	1	1	1	1	1	1	1	237	16
	17	284	2	1	1	2	2	1	1	1	1	1	1	1	1	1	1	284	17
	18	338	3	1	1	2	2	1	2	1	1	1	1	1	1	1	1	338	18
	19	397	3	1	1	2	2	1	2	1	1	1	1	2	1	1	1	397	19
20 psf Slab 90C	20	463	3	2	1	2	2	1	2	1	1	1	1	2	1	1	1	463	20
	21	536	4	2	1	3	2	1	2	1	2	1	1	2	1	1	1	536	21
	22	616	4	2	1	3	3	1	3	1	2	1	2	2	1	1	1	616	22
	23	704	5	2	1	3	3	1	3	1	2	1	2	2	1	1	2	704	23
10 psf	**Slab 90B**	722	**5**	**2**	**1**	**3**	**3**	**1**	**3**	**1**	**2**	**1**	**2**	**2**	**1**	**1**	**2**	722	Slab
	24	800	5	2	1	4	3	1	3	1	2	1	2	3	1	1	2	800	24
10 psf	**Slab 90C**	886	**6**	**3**	**2**	**4**	**4**	**1**	**4**	**1**	**2**	**1**	**2**	**3**	**2**	**1**	**2**	886	Slab
	25	904	6	3	2	4	4	1	4	1	2	1	2	3	2	1	2	904	25
	26	1017	7	3	2	5	4	1	4	1	3	1	2	3	2	1	2	1017	26
	27	1139	7	3	2	5	5	2	4	1	3	1	2	3	2	1	2	1139	27
	28	1270	8	3	2	6	5	2	5	1	3	1	3	4	2	1	2	1270	28
	29	1411	9	4	2	6	6	2	5	2	3	1	3	4	2	2	3	1411	29
	30	1563	n/a	4	2	7	6	2	6	2	4	1	3	5	2	2	3	1563	30
	31	1724	n/a	5	3	8	7	2	6	2	4	2	3	5	2	2	3	1724	31
	32	1896	n/a	5	3	8	7	2	7	2	4	2	4	5	3	2	3	1896	32
	33	2080	n/a	5	3	9	8	2	8	2	5	2	4	6	3	2	3	2080	33
	34	2275	n/a	6	3	n/a	9	3	8	2	5	2	4	6	3	2	4	2275	34
	35	2481	n/a	6	3	n/a	n/a	3	9	2	5	2	5	7	3	2	4	2481	35
	36	2700	n/a	7	4	n/a	n/a	3	n/a	2	6	2	5	8	4	3	4	2700	36
	37	2931	n/a	7	4	n/a	n/a	3	n/a	3	6	2	5	8	4	3	5	2931	37
	38	3175	n/a	8	4	n/a	n/a	4	n/a	3	7	2	6	9	4	3	5	3175	38
	39	3433	n/a	9	5	n/a	n/a	4	n/a	3	7	3	6	9	4	3	5	3433	39
	40	3704	n/a	9	5	n/a	n/a	4	n/a	3	8	3	7	n/a	5	3	6	3704	40
	41	3988	n/a	n/a	5	n/a	n/a	4	n/a	3	8	3	7	n/a	5	4	6	3988	41
	42	4288	n/a	n/a	6	n/a	n/a	5	n/a	4	9	3	8	n/a	5	4	7	4288	42
	43	4601	n/a	n/a	6	n/a	n/a	5	n/a	4	n/a	3	8	n/a	6	4	7	4601	43
	44	4930	n/a	n/a	6	n/a	n/a	5	n/a	4	n/a	3	9	n/a	6	4	8	4930	44
	45	5273	n/a	n/a	7	n/a	n/a	6	n/a	4	n/a	4	9	n/a	7	5	8	5273	45
	46	5633	n/a	n/a	7	n/a	n/a	6	n/a	5	n/a	4	n/a	n/a	7	5	9	5633	46
	47	6008	n/a	n/a	8	n/a	n/a	6	n/a	5	n/a	4	n/a	n/a	7	5	9	6008	47
	48	6400	n/a	n/a	8	n/a	n/a	7	n/a	5	n/a	4	n/a	n/a	8	5	n/a	6400	48
	49	6808	n/a	n/a	9	n/a	n/a	7	n/a	5	n/a	5	n/a	n/a	8	6	n/a	6808	49
	50	7234	n/a	n/a	9	n/a	n/a	7	n/a	6	n/a	5	n/a	n/a	9	6	n/a	7234	50

Fastener Terminology
#14 SMS = #14 sheet metal or SDS screw, 1/2" minimum length
3/8" B = 3/8" Diameter Bolt
See General Notes for specifics on fasteners

1 Spacing between bolts and screws shall be 2.5 times the shank diameter
2 The edge distance of bolts and screws shall be 3 times the shank diameter
3 Connections shall be arranged so that the center of resistance of the connection shall coincide with the resultant line of action of the load.

TABLE 7.6: WALL ATTACHMENTS FOR LATTICE COVERS

GRND SNOW LOAD (PSF)	WIND SPEED MPH	CLEAR-SPAN (FT)	ANC 3 NO. OF #10 SCREWS PER RAFTER	ANC 4 NO. OF 1/4" LAG SCREWS PER RAFTER
10 LIVE	11OC	22'	2	2
20 LIVE	130C	13'	2	2
	130C	20'	3	2
25		13'	2	2
		19'	3	2
30		11'	2	2
		16'	3	2
40		8'	2	2
		12'	3	2
60		8'	3	2
		11'	4	3

TABLE 7.7 STUCCO ATTACHMENT TO WALL
ALLOWABLE DISTANCE TO FIRST ROW OF POSTS

Ground Snow Load (psf)		16" o/c 1 Lag Screw	16" o/c 2 Lag Screws	24" o/c 2 Lag Screws	24" o/c 3 Lag Screws
		Max Wind Condition 110 mph Exposure C			
Live	10	12'-9"	20'	17'	20'
Live	20	7'	14'	9'	14'
	25	7'-6"	15'	10'	15'
	30	6'-6"	13'	8'-6"	13'
	40	4'-10"	9'-8"	6'-6"	9'-9"
	60	3'	6'-7"	4'	6'-7"

TABLE 7.5: WALL ATTACHMENTS FOR SOLID COVER STRUCTURES

WIND SPEED (MPH) AND EXPOSURE	LIVE/ SNOW LOAD (PSF)	ANC 1 O/C SPACING CONCRETE ANCHORS	ANC 2 O/C SPACING MASONRY ANCHORS	ANC 3 O/C SPACING FOR #10 x 2" SMS SCREWS	ANC 4 CLEAR-SPAN (FT)	ANC 4 # OF 1/4" LAG SCREWS PER STUD @16" O/C SPACING
90 C	10	20"	20"	8"	18'	1
	LIVE				21'	2
105 C	20	20"	20"	6"	11'	1
	LIVE				21'	2
110 C	25	20"	20"	6"	10'	1
					21'	2
	30	20"	20"	6"	9'	1
					17'	2
	40	16"	16"	4"	13'	2
	60	16"	16"	4"	9'	2

1 Clearspan on this chart is the distance from the wall to the first row of columns.
2 Hilti Kwik Bolt TZ 3/8" diameter and 2" embed: ICC ESR 1917 or other anchor w/ 550# shear vs wind and seismic loads. Use 1" steel washer.
3 Masonry anchors must have a shear value of 250# for wind or seismic loads. Use 1" diameter steel washer.
4 1/4" Lag screws must have 2 1/4" of penetration into studs. These lag screws must have an 1/8" lead hole and 5/8" steel washers
5 10 and 20 psf are live or snow loads, 25- 60 psf are snow loads.
6 Add one fastener to both ends of all covers. Use 5/8" washers on all end fasteners attaching directly to wall.

Amerimax Building Products
5208 Tennyson Parkway
Plano, Texas 75024

Carl Putnam, P. E.
3441 Ivylink Place
Lynchburg, VA 24503
(434) 384-2514
carlputnam@comcast.net

REGISTERED PROFESSIONAL ENGINEER
CARL PUTNAM
C 68139
EXP. 6/30/2009
CIVIL
STATE OF CALIFORNIA

M3-2006

4/27/2009

7.0 FOOTING AND SLAB ATTACHMENT TABLES

EQUIVALENT FOOTINGS FOR FREESTAND AND ATTACHED					
CONSTRAINED FOOTING (IN)	NON CONSTRAINED FOOTING (IN)	DIAMETER OF CIRCULAR FOOTINGS (IN)			
		12"	18"	24"	30"
		DEPTH OF CIRCULAR FOOTINGS (IN)			
18	18	52	23	13	12
19	20	61	27	15	12
20	22	71	31	18	12
21	23	82	36	20	13
22	24	94	42	24	15
23	26	108	48	27	17
24	27	N/A	54	31	20
25	29	N/A	61	35	22
26	31	N/A	69	39	25
27	33	N/A	77	44	28
28	35	N/A	86	49	31
29	36	N/A	96	54	35
30	38	N/A	106	60	38
31	39	N/A	117	66	42
32	40	N/A	129	72	46
33	41	N/A	141	79	51
34	43	N/A	154	87	56
35	44	N/A	168	95	61
36	46	N/A	N/A	103	66
37	47	N/A	N/A	112	72
38	48	N/A	N/A	121	78

TABLE 7.8

Equivalent Cubic Footing d (in)	For Single Span Attached Structures Only			
	Footing Depth (in)			
	18	24	30	36
	Required Length of Square Footing (in)			
20	21	18	16	15
21	23	20	18	16
22	24	21	19	17
23	26	23	20	18
24	28	24	21	20
25	29	26	23	21
26	31	27	24	22
27	33	29	26	23
28	35	30	27	25
29	37	32	29	26
30	39	34	30	27
31	41	35	32	29
32	43	37	33	30
33	45	39	35	32
34	47	40	36	33
35	49	42	38	35
36	51	44	39	36
37	53	46	41	38
38	55	48	43	39
39	57	50	44	41
40	60	52	46	42
41	62	54	48	44
42	64	56	50	45
43	66	58	51	47
44	69	60	53	49
45	71	62	55	50
46	74	64	57	52
47	76	66	59	54
48	78	68	61	55
49	81	70	63	57
50	83	72	65	59

TABLE 7.9

For Single Span Attached Structures Only			
	Wind Condition		
Trib Area for Solid Covers (sq ft)	90 mph Exp C	110 mph Exp C	Trib Area for Lattice Structures (sq ft)
	Required "d" of Footing (in)		
20	15	17	33
30	17	19	50
40	19	21	67
50	21	23	83
60	22	25	100
70	23	26	117
80	24	27	133
90	25	28	150
100	26	29	167
110	27	30	183
120	27	31	200
130	28	32	217
140	29	33	233
150	30	33	250
160	30	34	267
170	31	35	283
180	31	35	300
190	32	36	317
200	33	37	333
210	33	37	350
220	34	38	367
230	34	38	383
240	35	39	400
250	35	40	417
260	36	40	433
270	36	41	450
280	36	41	467
290	37	42	483
300	37	42	500

TABLE 7.10

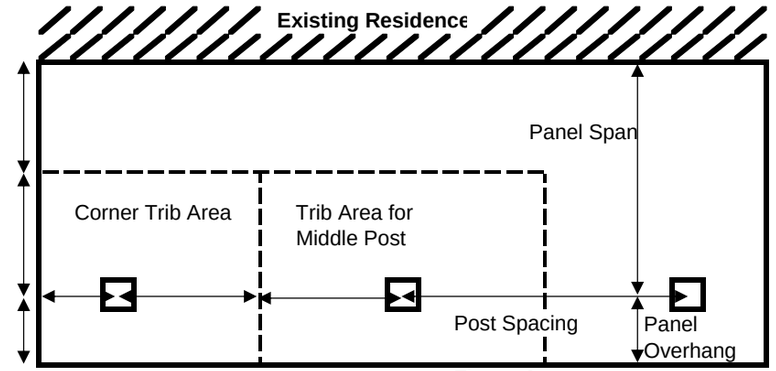

Figure 1

Determine Trib Area from Figure 1

Amerimax Building Products
5208 Tennyson Parkway
Plano, Texas 75024

Carl Putnam, P. E.
3441 Ivylink Place
Lynchburg, VA 24503
carlputnam@comcast.net

REGISTERED PROFESSIONAL ENGINEER CARL PUTNAM C 68139 EXP. 6/30/2009 CIVIL STATE OF CALIFORNIA

4/27/2009

M4-2006

7.0 Requirements for Surface Mounted Posts on Concrete Slabs or Footings

REQUIRED NUMBER OF POSTS FOR SINGLE SPAN LATTICE UNITS WITH SURFACE MOUNTED POSTS ON CONCRETE SLABS OR FOOTINGS

Table L1a: Use this table for the following headers
3x8 Alum Header
Double 2x6.5 Alum Header
Single Steel C Beam

Wind Speed	Required Number of Posts	Post Height (ft) 8'	9'	10'	11'	12'	8'	9'	10'	11'	12'
		Wind Exposure B					Wind Exposure C				
		MAXIMUM TRIBUTARY WIDTH ALLOWED									
85 mph	2 or 3	12'	9'	6'	3'	0'	11'	8'	5'	3'	0'
	4	13'	13'	10'	6'	3'	13'	13'	9'	5'	2'
	5	13'	13'	13'	10'	5'	13'	13'	13'	8'	4'
	6	13'	13'	13'	13'	7'	13'	13'	13'	11'	6'
	7	13'	13'	13'	13'	10'	13'	13'	13'	13'	9'
90 mph	2 or 3	12'	9'	6'	3'	0'	9'	7'	4'	2'	0'
	4	13'	13'	10'	6'	3'	13'	11'	8'	5'	2'
	5	13'	13'	13'	10'	5'	13'	13'	11'	8'	4'
	6	13'	13'	13'	13'	7'	13'	13'	13'	10'	6'
	7	13'	13'	13'	13'	10'	13'	13'	13'	13'	8'
95 mph	2 or 3	12'	9'	6'	3'	0'	8'	6'	4'	2'	0'
	4	13'	13'	10'	6'	3'	13'	10'	7'	4'	2'
	5	13'	13'	13'	10'	5'	13'	13'	10'	7'	4'
	6	13'	13'	13'	13'	7'	13'	13'	13'	9'	5'
	7	13'	13'	13'	13'	10'	13'	13'	13'	11'	7'
100 mph	2 or 3	11'	8'	5'	2'	0'	7'	5'	3'	1'	0'
	4	13'	13'	9'	5'	2'	12'	9'	6'	3'	1'
	5	13'	13'	13'	8'	4'	13'	12'	9'	5'	2'
	6	13'	13'	13'	11'	6'	13'	13'	11'	7'	4'
	7	13'	13'	13'	13'	8'	13'	13'	13'	9'	5'
105 mph	2 or 3	9'	6'	3'	1'	0'	6'	4'	2'	1'	0'
	4	13'	11'	7'	3'	0'	10'	7'	5'	2'	0'
	5	13'	13'	10'	6'	1'	13'	10'	7'	4'	1'
	6	13'	13'	13'	8'	3'	13'	13'	9'	5'	2'
	7	13'	13'	13'	10'	4'	13'	13'	11'	7'	3'
110 mph	2 or 3	8'	5'	2'	0'	0'	5'	3'	2'	0'	0'
	4	13'	9'	5'	2'	0'	9'	6'	3'	1'	0'
	5	13'	13'	8'	3'	0'	12'	9'	5'	2'	0'
	6	13'	13'	11'	5'	0'	13'	11'	7'	4'	0'
	7	13'	13'	13'	7'	1'	13'	13'	9'	5'	1'

Table L1b: Use this table for the following headers
Double 3x8 Alum Header
Double Steel C Beam

Wind Speed	Required Number of Posts	Post Height (ft) 8'	9'	10'	11'	12'	8'	9'	10'	11'	12'
		Wind Exposure B					Wind Exposure C				
		MAXIMUM TRIBUTARY WIDTH ALLOWED									
85 mph	2 or 3	13'	13'	10'	7'	4'	13'	12'	9'	6'	4'
	4	13'	13'	13'	13'	9'	13'	13'	13'	11'	8'
	5	13'	13'	13'	13'	13'	13'	13'	13'	13'	11'
	6	13'	13'	13'	13'	13'	13'	13'	13'	13'	13'
	7	13'	13'	13'	13'	13'	13'	13'	13'	13'	13'
90 mph	2 or 3	13'	13'	10'	7'	4'	13'	11'	8'	6'	3'
	4	13'	13'	13'	13'	9'	13'	13'	13'	10'	7'
	5	13'	13'	13'	13'	13'	13'	13'	13'	13'	10'
	6	13'	13'	13'	13'	13'	13'	13'	13'	13'	13'
	7	13'	13'	13'	13'	13'	13'	13'	13'	13'	13'
95 mph	2 or 3	13'	13'	10'	7'	4'	13'	10'	7'	5'	3'
	4	13'	13'	13'	13'	9'	13'	13'	12'	9'	6'
	5	13'	13'	13'	13'	13'	13'	13'	13'	13'	9'
	6	13'	13'	13'	13'	13'	13'	13'	13'	13'	12'
	7	13'	13'	13'	13'	13'	13'	13'	13'	13'	13'
100 mph	2 or 3	13'	13'	9'	6'	4'	11'	9'	6'	4'	2'
	4	13'	13'	13'	11'	7'	13'	13'	10'	8'	5'
	5	13'	13'	13'	13'	11'	13'	13'	13'	11'	8'
	6	13'	13'	13'	13'	13'	13'	13'	13'	13'	10'
	7	13'	13'	13'	13'	13'	13'	13'	13'	13'	13'
105 mph	2 or 3	13'	11'	8'	5'	2'	10'	7'	5'	3'	1'
	4	13'	13'	13'	9'	5'	13'	12'	9'	6'	3'
	5	13'	13'	13'	13'	8'	13'	13'	12'	9'	6'
	6	13'	13'	13'	13'	11'	13'	13'	13'	12'	8'
	7	13'	13'	13'	13'	13'	13'	13'	13'	13'	10'
110 mph	2 or 3	13'	9'	6'	3'	1'	8'	6'	4'	2'	1'
	4	13'	13'	11'	7'	3'	13'	10'	7'	5'	2'
	5	13'	13'	13'	10'	6'	13'	13'	10'	7'	4'
	6	13'	13'	13'	13'	8'	13'	13'	13'	9'	5'
	7	13'	13'	13'	13'	11'	13'	13'	13'	12'	7'

Seismic Size Requirements

Table L2a
3x8 Alum Header
Double 2x6.5 Alum Header
Single Steel C Beam

Ss	Size Allowed	
20%	2215	
30%	1477	
40%	1107	
50%	1013	
60%	844	*
70%	723	
80%	738	**
90%	656	
100%	591	
110%	586	***
120%	537	
130%	545	
140%	506	
150%	473	

Table L2b
Double 3x8 Alum Header
Double Steel C Beam

Ss	Size Allowed	
20%	2906	
30%	1937	
40%	1453	
50%	1328	
60%	1107	
70%	949	
80%	969	
90%	861	*
100%	775	
110%	769	
120%	705	
130%	715	**
140%	664	
150%	620	***

Tables L1 and L2 need to be checked for surface mount concrete attachment

Directions for using Seismic Table L2a or L2b
1. Determine Tributary width
2. Determine width of structure
3. Determine height of structure
4. Determine number of posts structure has
5. Determine Ss for your area (contact your local building department)****
6. Choose Table L2a or L2b based on the header
7. Determine the maximum size allowed on the chart
8. Multiply #1, #2 and #3 and divide by #4*****
9. If #8 is lower than #7 the structure is OK for seismic
10. If your Ss is over 150% use 150%

*no chec
**no che
***no ch
****Ss is n

Alternatively ASCE7-05 12.8.1.3
For 2 post structures divide by 3
For 3 post structures divide by 3
For 4 post structures divide by 4.5
For 5 post structures divide by 6
For all others add 1.5 to number of posts

Table SLAB1: Edge Distance Requirements for Attaching to Concrete Slab

Lattice Cover Trib Area (sq ft)	Solid Cover Trib Area (sq ft)	Exposure B 85	90	95	100	105	110	Exposure C 85	90	95	100	105	110 mph
50	30	s1	s1	s1	s1	s1	s1	s1	s1	s1	s1	s1	s1
53	32	s1	s1	s1	s1	s1	s1	s1	s1	s1	s1	s1	s1
57	34	s1	s1	s1	s1	s1	s1	s1	s1	s1	s1	s1	s1
60	36	s1	s1	s1	s1	s1	s2	s1	s1	s1	s1	s1	s2
63	38	s1	s1	s1	s1	s1	s2	s1	s1	s1	s1	s1	s2
67	40	s1	s1	s1	s1	s2	s3	s1	s1	s1	s1	s2	s3
69	42	s1	s1	s1	s1	s2	s3	s1	s1	s1	s1	s2	s3
	44	s1	s1	s1	s2	s3	s3	s1	s1	s1	s2	s3	s3
	46	s1	s1	s1	s2	s3	s4	s1	s1	s1	s2	s3	s4
	48	s1	s1	s2	s2	s3	s5	s1	s1	s2	s2	s3	s5
	50	s2	s2	s2	s3	s4	s5	s2	s2	s2	s3	s4	s5
	51	s2	s2	s2	s3	s5	s6	s2	s2	s2	s3	s5	s6
	52	s2	s2	s2	s3	s5	s6	s2	s2	s2	s3	s5	s6
	53	s2	s2	s2	s3	s5	s7	s2	s2	s2	s3	s5	s7
	54	s2	s2	s2	s3	s5	s7	s2	s2	s2	s3	s5	s7
	55	s2	s2	s3	s3	s5	s7	s2	s2	s3	s3	s5	s7
	56	s2	s2	s3	s4	s6	s8	s2	s2	s3	s4	s6	s8
	57	s3	s3	s3	s5	s6	s8	s3	s3	s3	s5	s6	s8
	58	s3	s3	s3	s5	s7	s8	s3	s3	s3	s5	s7	s8
	59	s3	s3	s3	s5	s7	s9	s3	s3	s3	s5	s7	s9
	60	s3	s3	s3	s5	s7	s10	s3	s3	s3	s5	s7	s10
	61	s3	s3	s3	s5	s8	s10	s3	s3	s3	s5	s8	s10
	62	s3	s3	s4	s6	s8	s10	s3	s3	s4	s6	s8	s10
	63	s3	s3	s5	s6	s8	s10	s3	s3	s5	s6	s8	s10
	64	s3	s3	s5	s7	s9	s11	s3	s3	s5	s7	s9	s11
	65	s4	s4	s5	s7	s9	s11	s4	s4	s5	s7	s9	s11
	66	s5	s5	s5	s7	s10	s11	s5	s5	s5	s7	s10	s11
	68.2	s5	s5	s5	s8	s10	s12	s5	s5	s5	s8	s10	s12

Check with local building authority to detemine if the structure is built in Exposure B or C.
Suburban, wooded and urban areas are generally Exposure B
Rural open areas are generally Exposure C

Directions for using these tables
1. **Determine Corner Tributary Area (see Figure 1)**
2. **Determine Wind Speed and Exposure for the patio cover**
3. **Cross Reference Table SLAB1 and find the "Slab Corner Code" (s1, s2, s3, s4 etc)**
4. **Determine Corner Edge Distance Requirements From Table Slab2**
5. **Set Post away from Corner as per Figure 2**

Table SLAB2:

Slab Corner Code	Distance From Corner X	Y
s1	6"	6"
s2	12"	6"
s3	18"	6"
s4	12"	12"
s5	24"	6"
s6	18"	12"
s7	30"	6"
s8	24"	12"
s9	18"	18"
s10	30"	12"
s11	24"	18"
s12	30"	18"
s13	24"	24"
s14	30"	24"

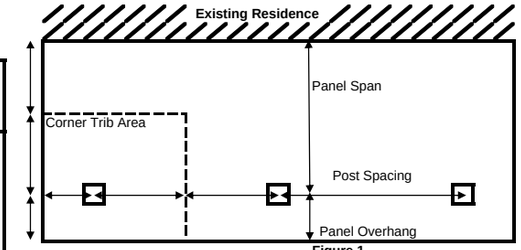

Figure 1

X and Y are interchangeable

Figure 2

3.5" Concrete Slab

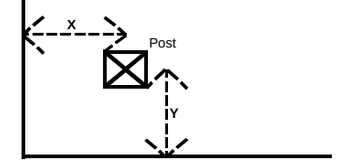

X and Y are interchangeable

4/27/2009

M5-2006